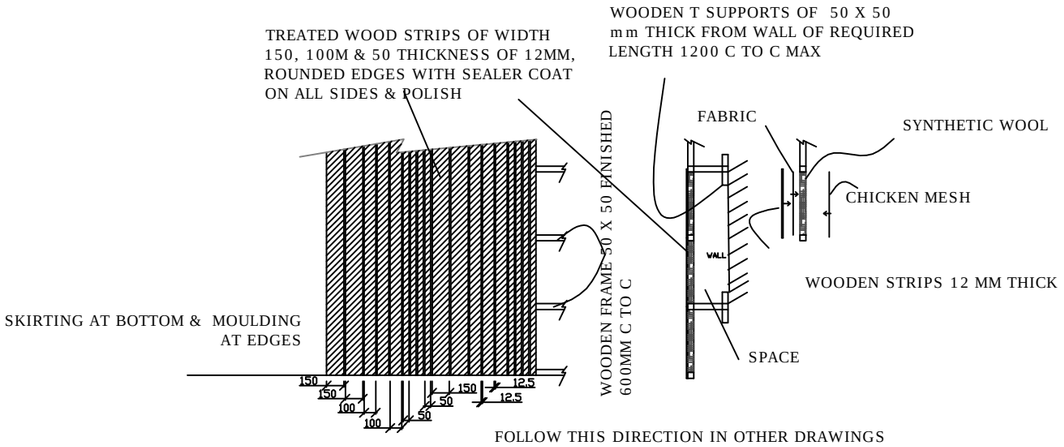

WALL PANELING WOODEN STRIPS

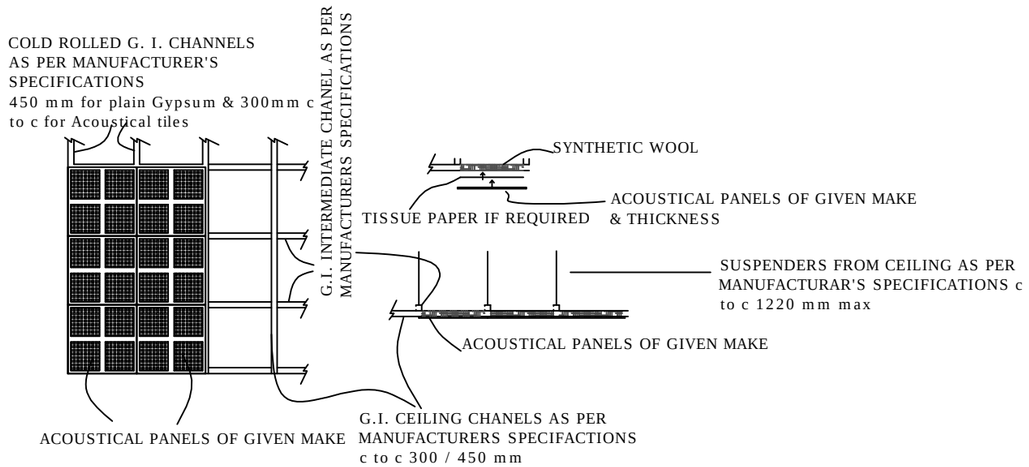

FOR G.I. FRAME &T GRID FOLLOW THE DETAILS OF MANUFACTURER

CEILING DETAILS

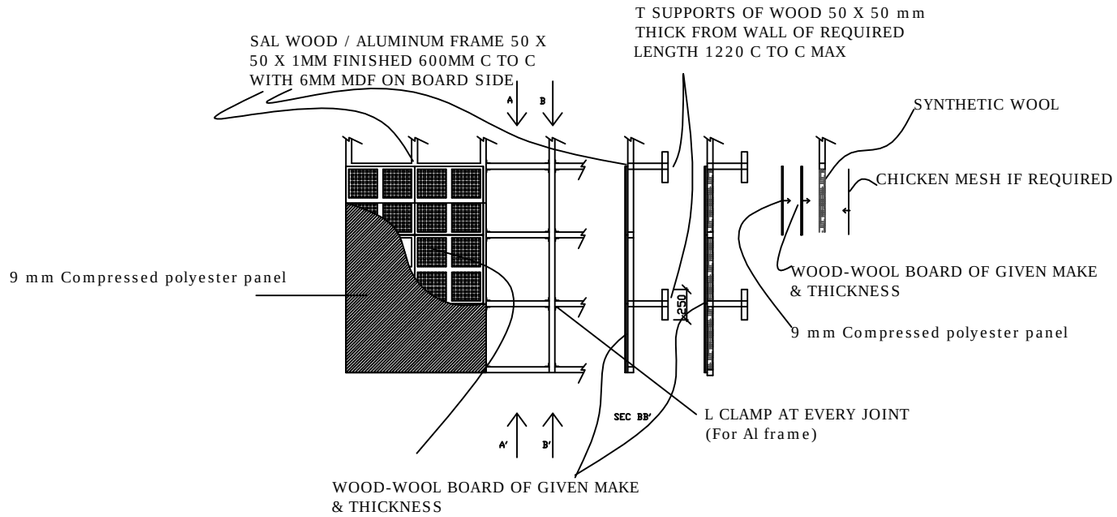

For fabric mounting follow the details of gripper manufacturer

WALL PANELING DETAILS

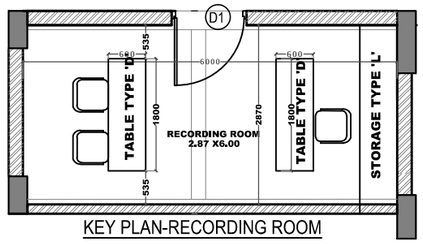

KEY PLAN-RECORDING ROOM

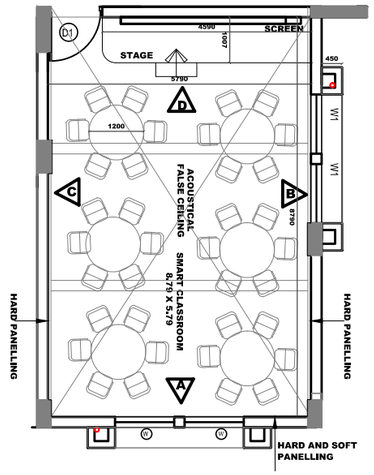

KEY PLAN-SMART CLASSROOM

PROPOSED ACOUSTICAL DETAILS FOR SMART CLASSROOM AND RECORDING ROOM

PROPOSED ACOUSTICAL DETAILS FOR TEACHERS LEARNING CENTER AT IUCAA CAMPUS,PUNE

NOTE:-
1) ALL DIMENSIONS ARE IN METERS UNLESS OTHERWISE SPECIFIED
2) CHECK ALL DIMENSIONS ON SITE.
3) DRAWING SHOULD NOT BE SCALED. ONLY WRITTEN DIMENSION SHOULD BE FOLLOWED.
4) IF ANY DISCREPANCY FOUND IN THIS DRAWING SAME SHOULD BE BROUGHT TO THE NOTICE OF THE ARCHITECT.

REVISION DETAIL	DATE

SMART CLASSROOM AND RECORDING ROOM

Tender Drawing

Acoustical Mounting Details

20.1.2020
Drawing No:IUCAA/TLC/ACC/500

Consultant:
V. N. PURANDARE & ASSOCIATES
124 Shaniware Peth, Pune
Cell: 98909 22712
E-mail: vijaypurandare@gmail.com
www.AuditoriumAcoustics.com

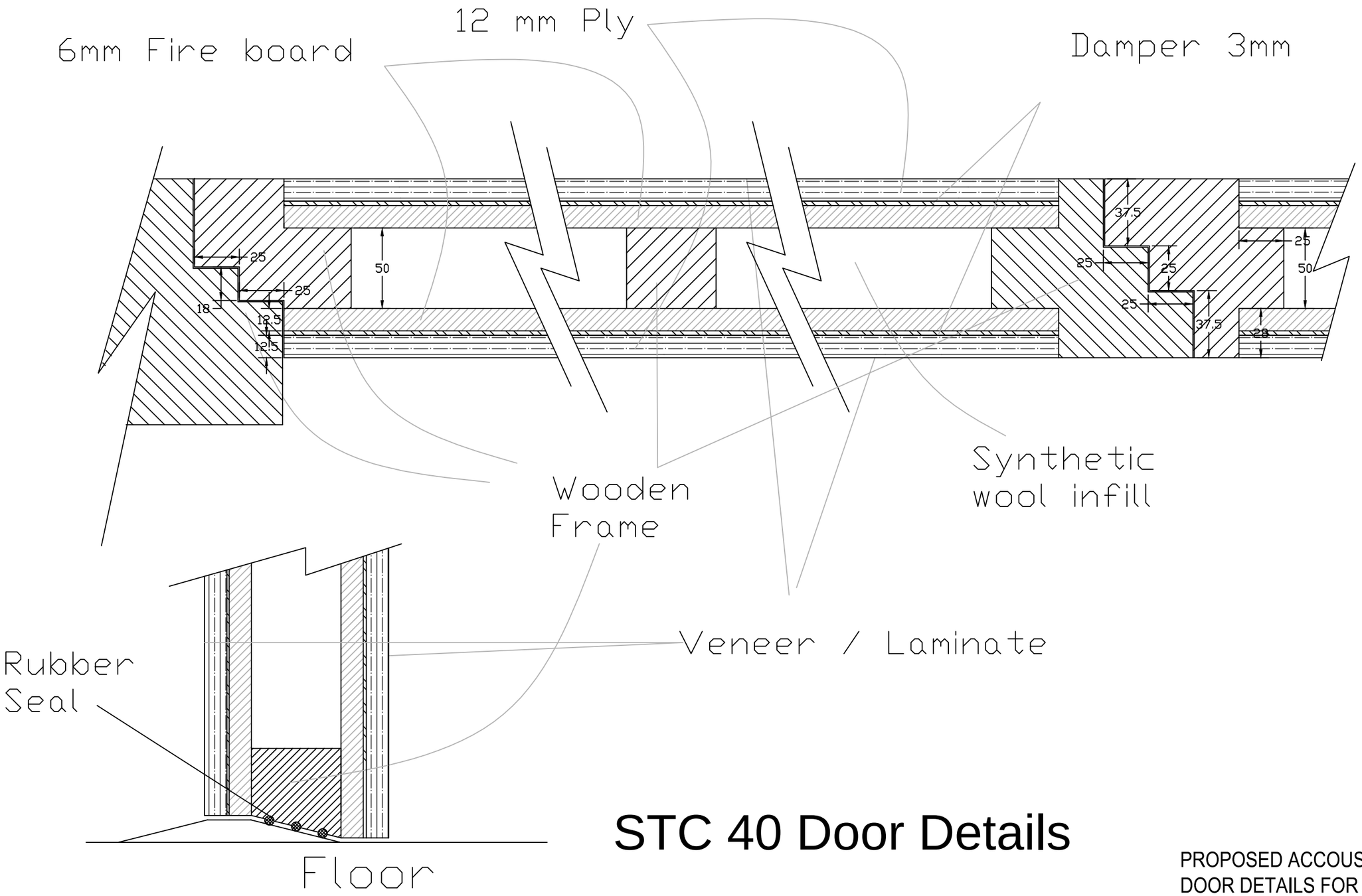

STC 40 Door Details

PROPOSED ACOUSTICAL DOOR DETAILS FOR SMART CLASSROOM AND RECORDING ROOM

PROPOSED ACOUSTICAL DETAILS FOR TEACHERS LEARNING CENTER AT IUCAA CAMPUS,PUNE

NOTE:-
1) ALL DIMENSIONS ARE IN METERS UNLESS OTHERWISE SPECIFIED
2) CHECK ALL DIMENSIONS ON SITE.
3) DRAWING SHOULD NOT BE SCALED. ONLY WRITTEN DIMENSION SHOULD BE FOLLOWED.
4) IF ANY DISCREPANCY FOUND IN THIS DRAWING SAME SHOULD BE BROUGHT TO THE NOTICE OF THE ARCHITECT.

REVISION DETAIL	DATE

SMART CLASSROOM AND RECORDING ROOM

Tender Drawing

Door Details

25 JUNE 2019
Drawing No:CIDCO/ BHP/INT/ 13

Auditorium Consultant:
V. N. PURANDARE & ASSOCIATES
124 Shaniware Peth, Pune
Cell: 98909 22712
E-mail: vijaypurandare@gmail.com
www.AuditoriumAcoustics.com

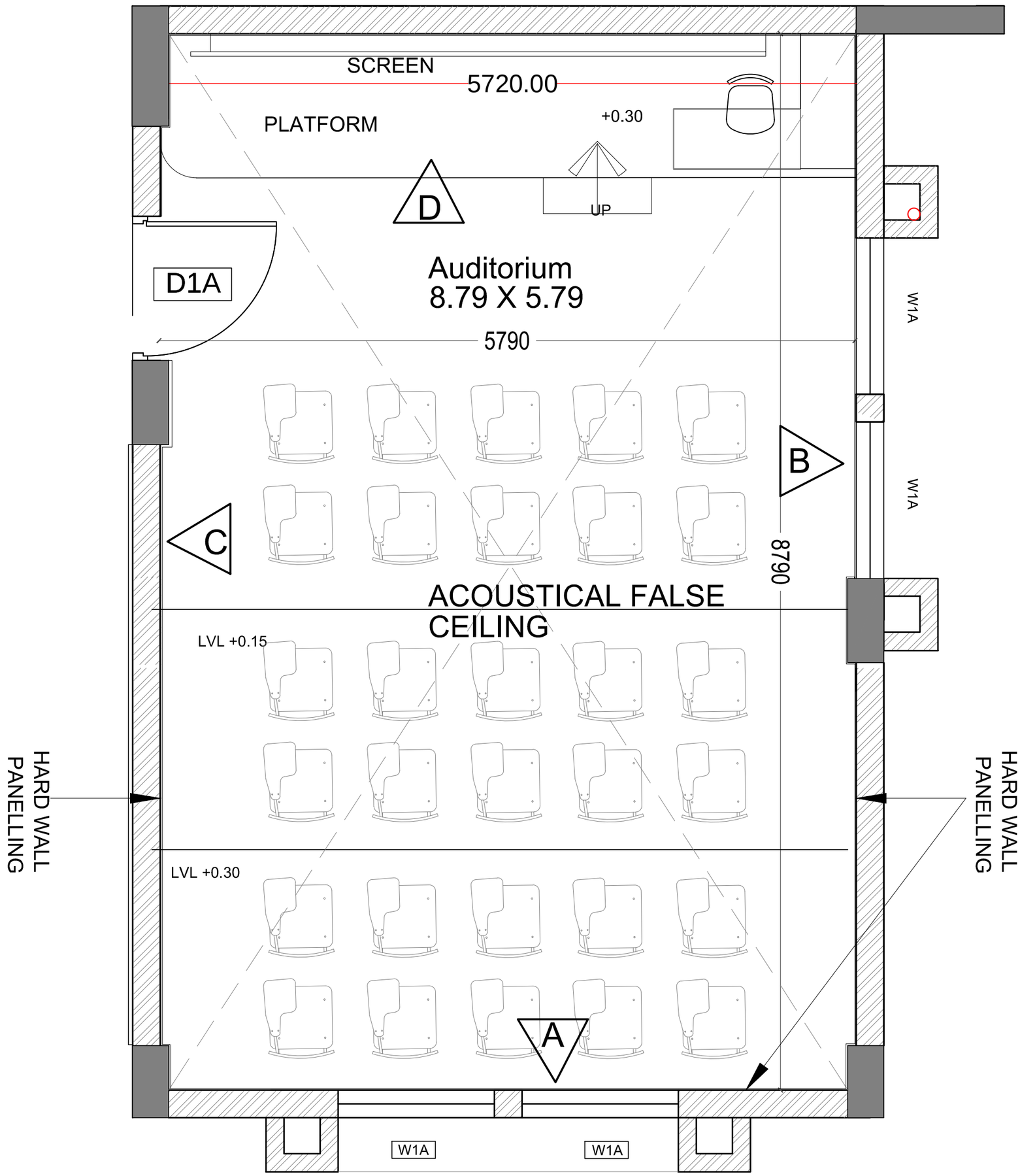

AUDITORIUM
LAYOUT -GROUND FLOOR

THIS DRAWING IS THE PROPERTY OF
M/S RAJEEV VISHW1ASRAO ARCHITECTS.(PUNE)
& NOT TO BE COPIED OR USED WITHOUT
THEIR WIRITTEN PERMISSION.

C:\Users\PC8\Desktop\TLC\AUDITORIUM AND SMART LAYOUT 20.1.20.20.dwg

ALL DIMENSIONS SHALL BE CHECKED & CO-RELATED WITH STRUCTURAL / WIORKING DRAWINGs & AMBIGUITY SHALL BE IMMEDIATELY BROUGHT TO THE NOTICE OF THE ARCHITECTS BEFORE ITS EXECUTION.
THIS DRAWING SHOULD NOT BE SCALED & ONLY WIRITTEN DIMENSIONS TO BE FOLLOWIED.
ALL DIMENSIONS ARE IN METER UNLESS OTHERWIISE SPECIFIED.

NO.	REVISIONS

ARCHITECT
RAJEEV VISHW1ASRAO
ARCHITECTS & PLANNERS
'SANSKRUTI' 3RD FLOOR, PLOT NO. 2, SADASHIV PETH, PUNE - 411 030. TEL. NO. - 020 24530008, 24532008

TITLE : AUDITORIUM ROOM LAYOUT
PROJECT : **TEACHER'S LEARNING CENTRE AT IUCAA CAMPUS**
CLIENT :THE DIRECTOR ,IUCAA
SCALE : NTS | DATE : 31.08.18 | DESIGN : KAVITA

DRG. NO.
IU/TLC/IN/121
DATE :
17.1.2020

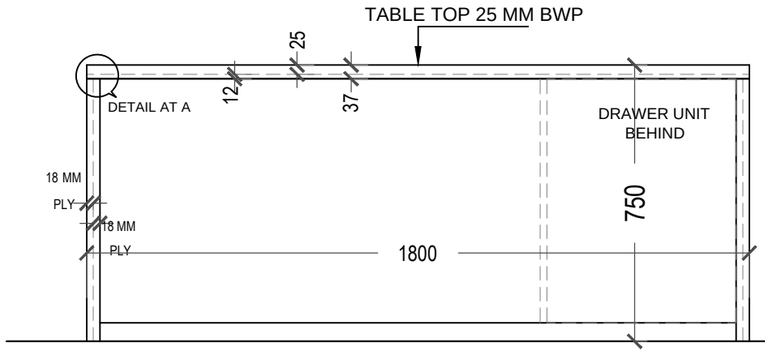

ELEVATION AT B

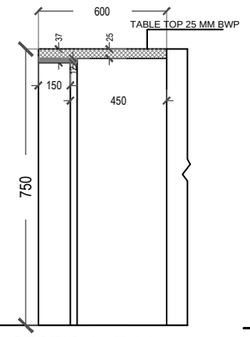

SECTION AT AA

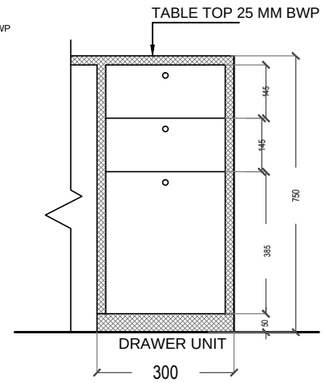

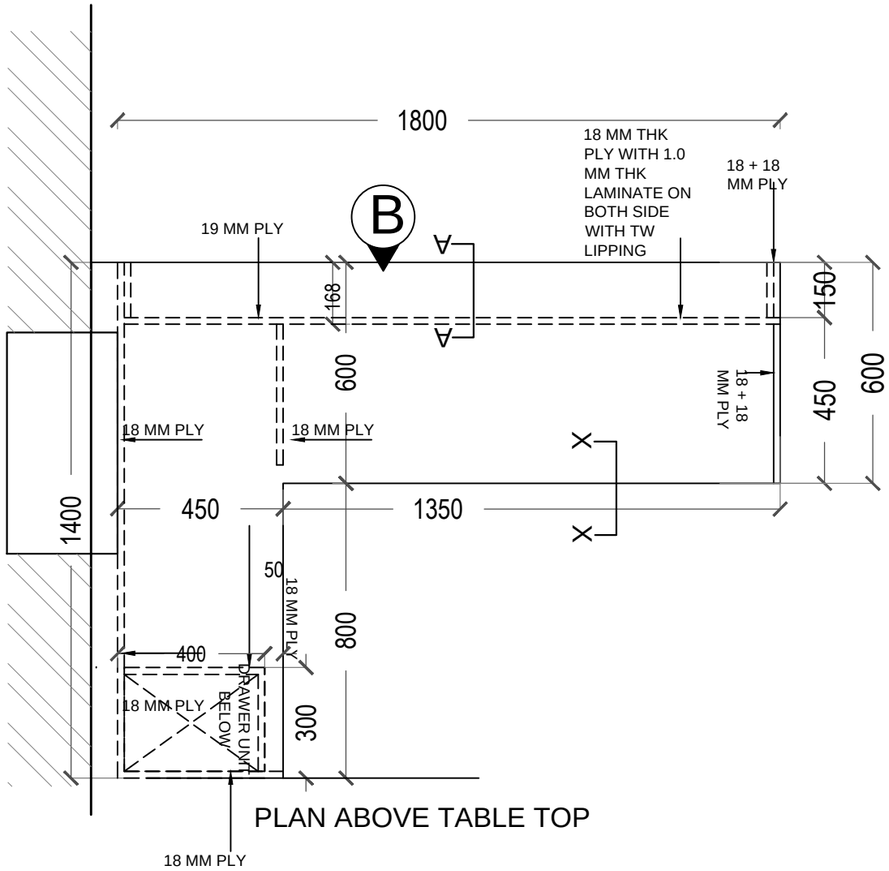

PLAN ABOVE TABLE TOP

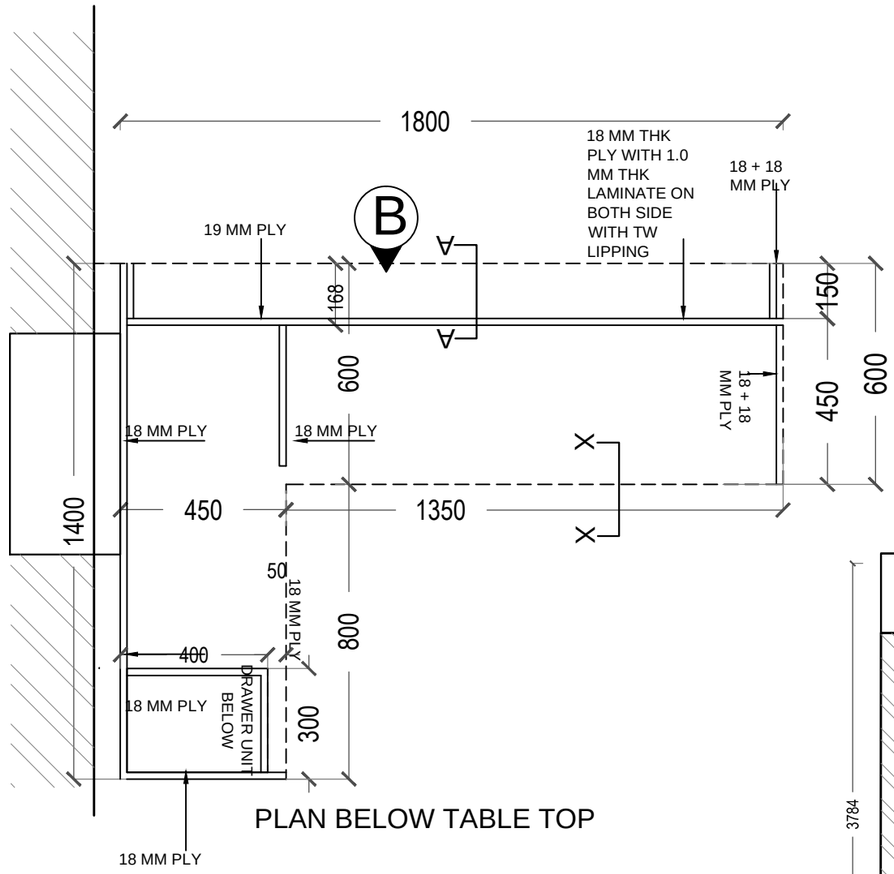

PLAN BELOW TABLE TOP

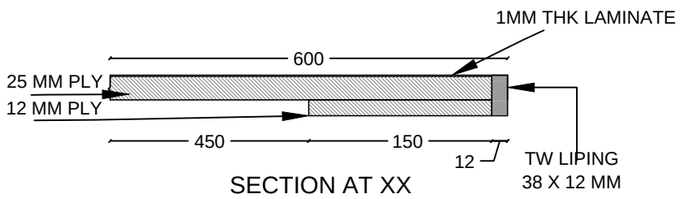

SECTION AT XX

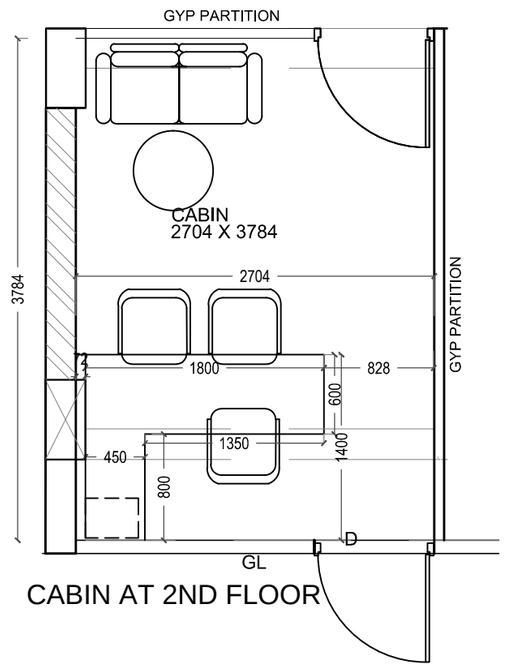

CABIN AT 2ND FLOOR

CABIN TABLE 'B' DETAILS

DRG. NO.	IU/TLC/IN/340
DATE :	20.1.2020

TITLE : CABIN DETAILS AT 2ND FLOOR

PROJECT : **TEACHER'S LEARNING CENTRE AT IUCAA CAMPUS**

CLIENT : THE DIRECTOR ,IUCAA

SCALE : NTS | DATE : 31.08.18 | DESIGN : KAVITA

ARCHITECT
RAJEEV VISHWI ASRAO
ARCHITECTS & PLANNERS
'SANSKRUTI' 3RD FLOOR, PLOT NO. 3, SADASHIV PETH,
PUNE - 411 030. TEL. NO. - 020 24530008, 24532008

NO	REVISIONS

ALL DIMENSIONS SHALL BE CHECKED & CO-RELATED WITH STRUCTURAL / WORKING DRAWING & AMBIGUITY SHALL BE IMMEDIATELY BROUGHT TO THE NOTICE OF THE ARCHITECTS BEFORE ITS EXECUTION.
THE DRAWINGS SHOULD NOT BE SCALED & ONLY WRITTEN DIMENSIONS TO BE FOLLOWED.
ALL DIMENSIONS ARE IN METER UNLESS OTHERWISE SPECIFIED.

THIS DRAWING IS THE PROPERTY OF M/S RAJEEV VISHWI ASRAO ARCHITECTS,(PUNE) & NOT TO BE COPIED OR USED WITHOUT THEIR WRITTEN SANCTION.

C:\Users\PC\Desktop\IT\CAUCAA - TLC - 2ND FLR CABIN TABLE DETAILS-B-11.2020.dwg

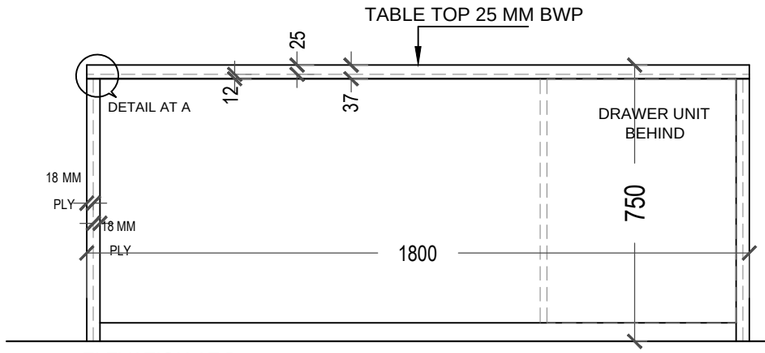

ELEVATION AT B

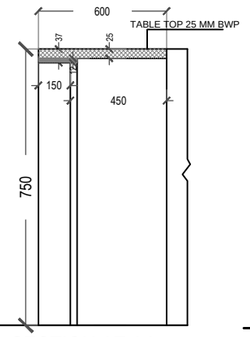

SECTION AT AA

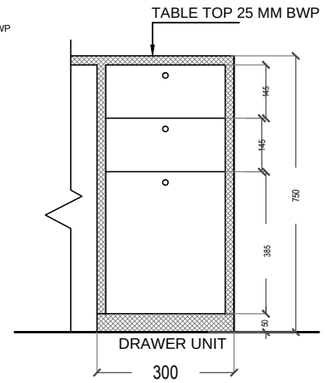

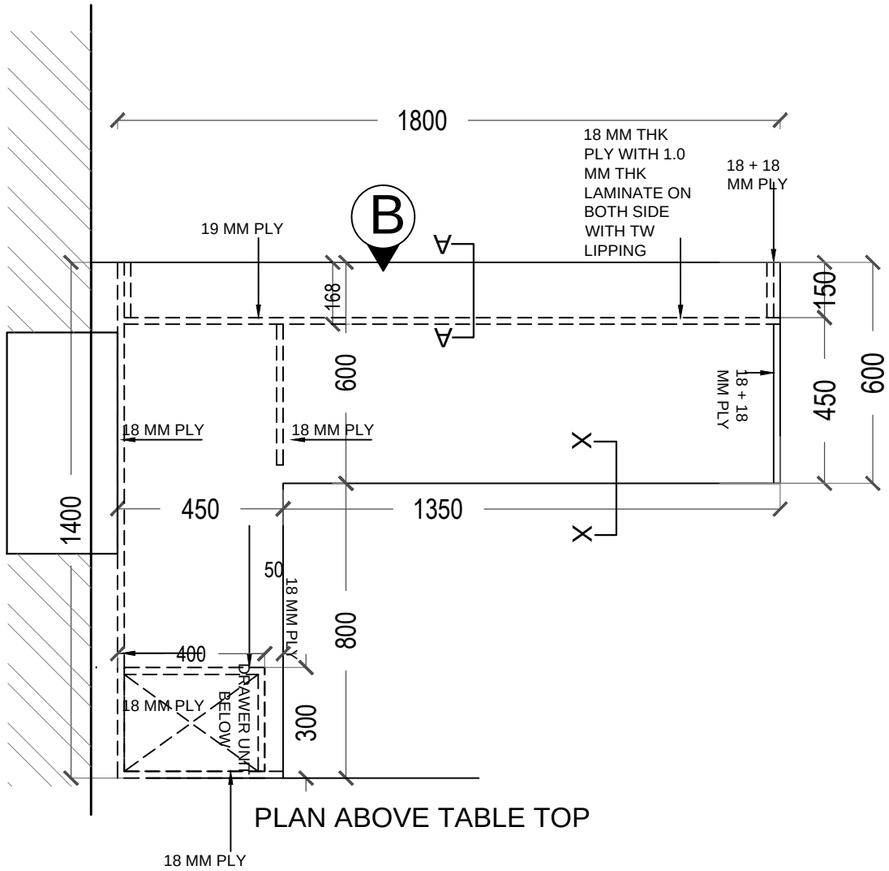

PLAN ABOVE TABLE TOP

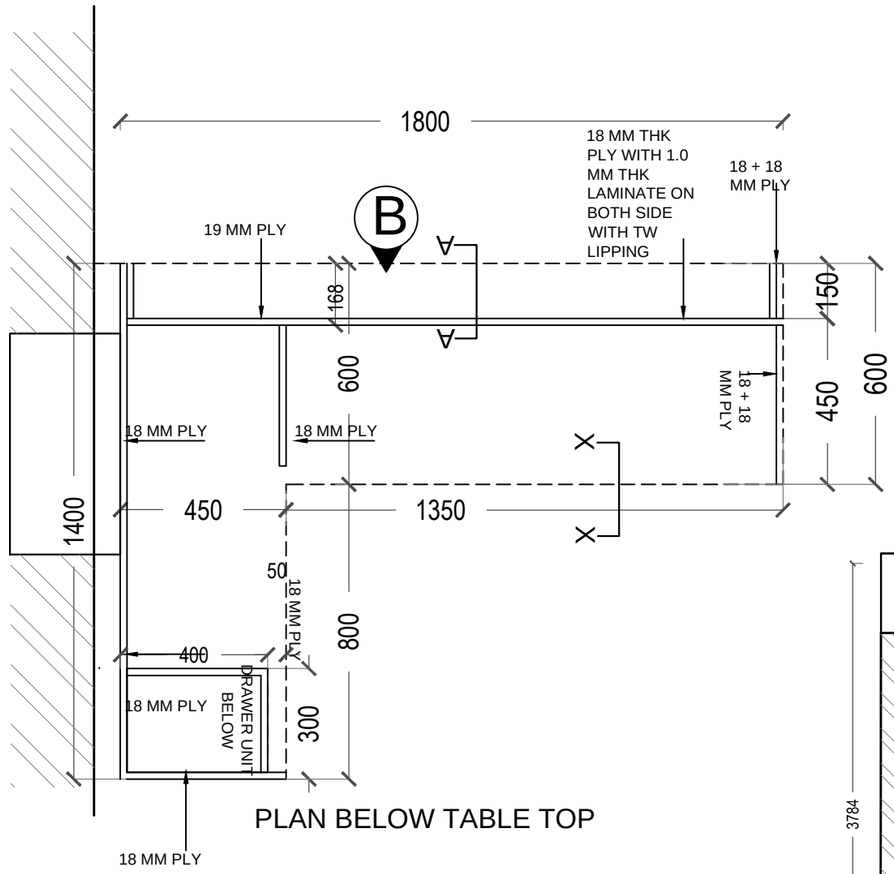

PLAN BELOW TABLE TOP

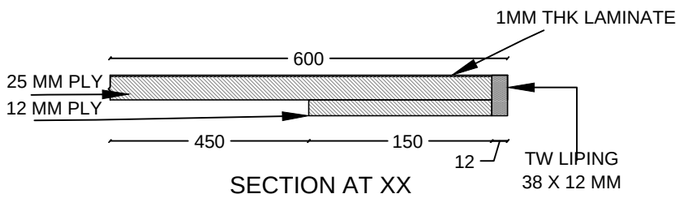

SECTION AT XX

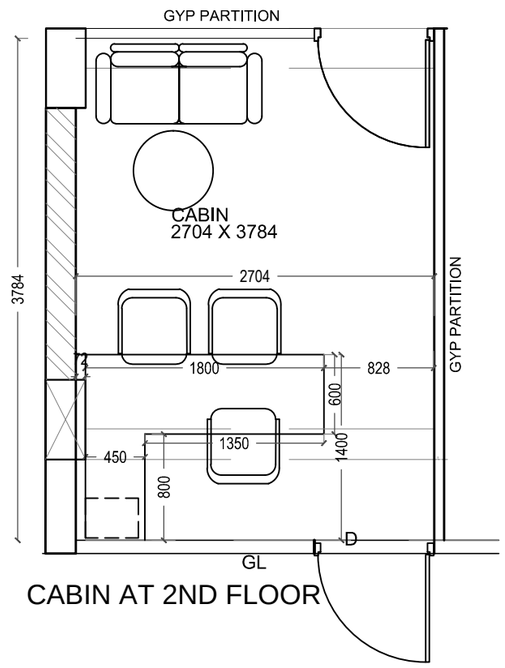

CABIN AT 2ND FLOOR

CABIN TABLE 'B' DETAILS

DRG. NO.
IU/TLC/IN/L30
DATE : 13.12.19

TITLE : CABIN DETAILS AT 2ND FLOOR

PROJECT : **TEACHER'S LEARNING CENTRE AT IUCAA CAMPUS**

CLIENT : THE DIRECTOR ,IUCAA

SCALE : NTS | DATE : 31.08.18 | DESIGN : KAVITA

ARCHITECT
RAJEEV VISHWI ASRAO
ARCHITECTS & PLANNERS
'SANSKRUTI' 3RD FLOOR, PLOT NO. 2, SADASHIV PETH,
PUNE - 411 030. TEL. NO. - 020 24530008, 24532008

NO	REVISIONS

ALL DIMENSIONS SHALL BE CHECKED & CO-RELATED WITH STRUCTURAL / WORKING DRAWING & AMBIGUITY SHALL BE IMMEDIATELY BROUGHT TO THE NOTICE OF THE ARCHITECTS BEFORE ITS EXECUTION.
THE DRAWINGS SHOULD NOT BE SCALED & ONLY WRITTEN DIMENSIONS TO BE FOLLOWED.
ALL DIMENSIONS ARE IN METER UNLESS OTHERWISE SPECIFIED.

THIS DRAWING IS THE PROPERTY OF M/S RAJEEV VISHWI ASRAO ARCHITECTS,(PUNE) & NOT TO BE COPIED OR USED WITHOUT THEIR WRITTEN SANCTION.

C:\Users\PC\Desktop\IT\CAUCAA - TLC - 2ND FLR CABIN TABLE DETAILS-23.1.2020.dwg

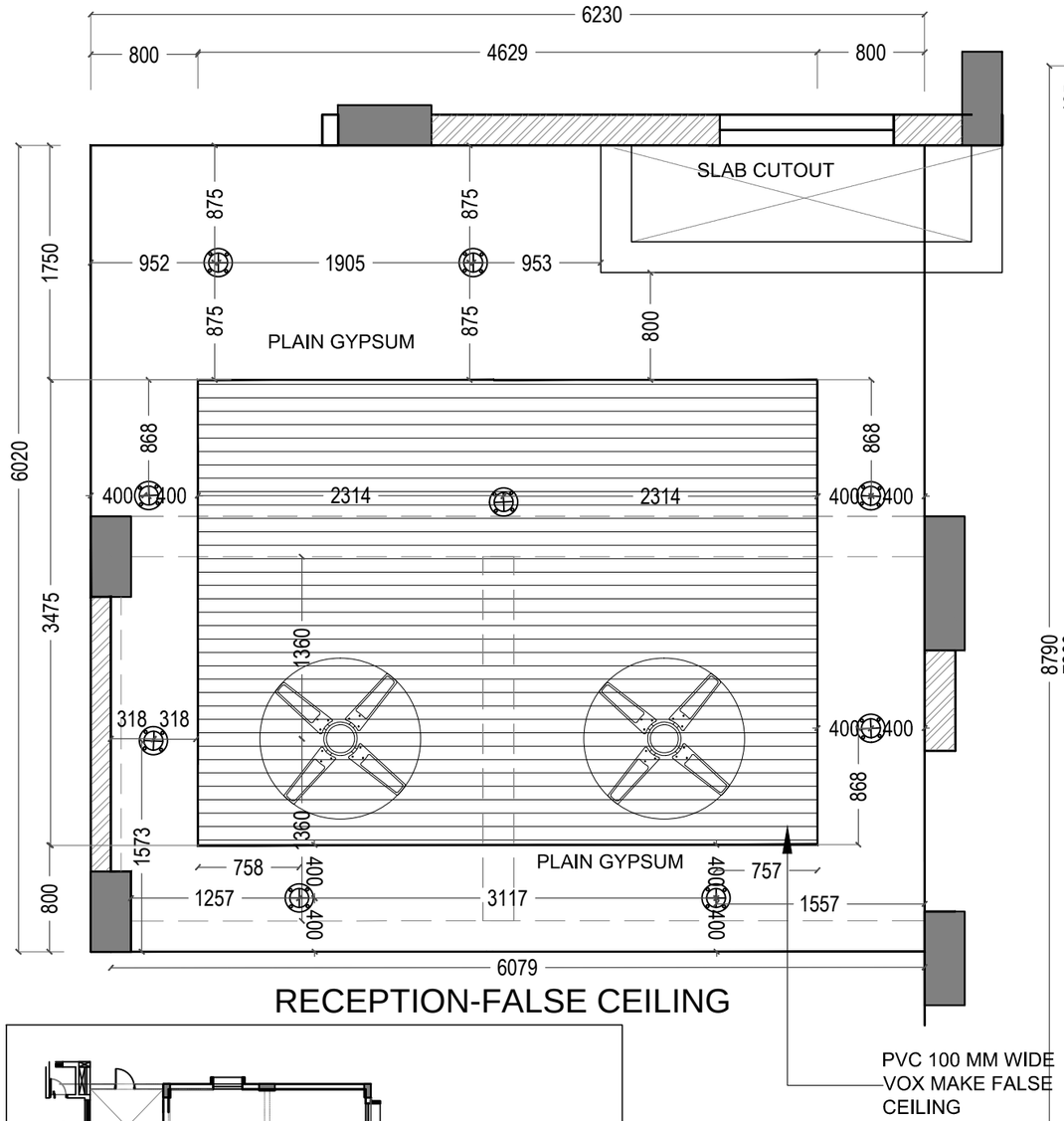

RECEPTION-FALSE CEILING

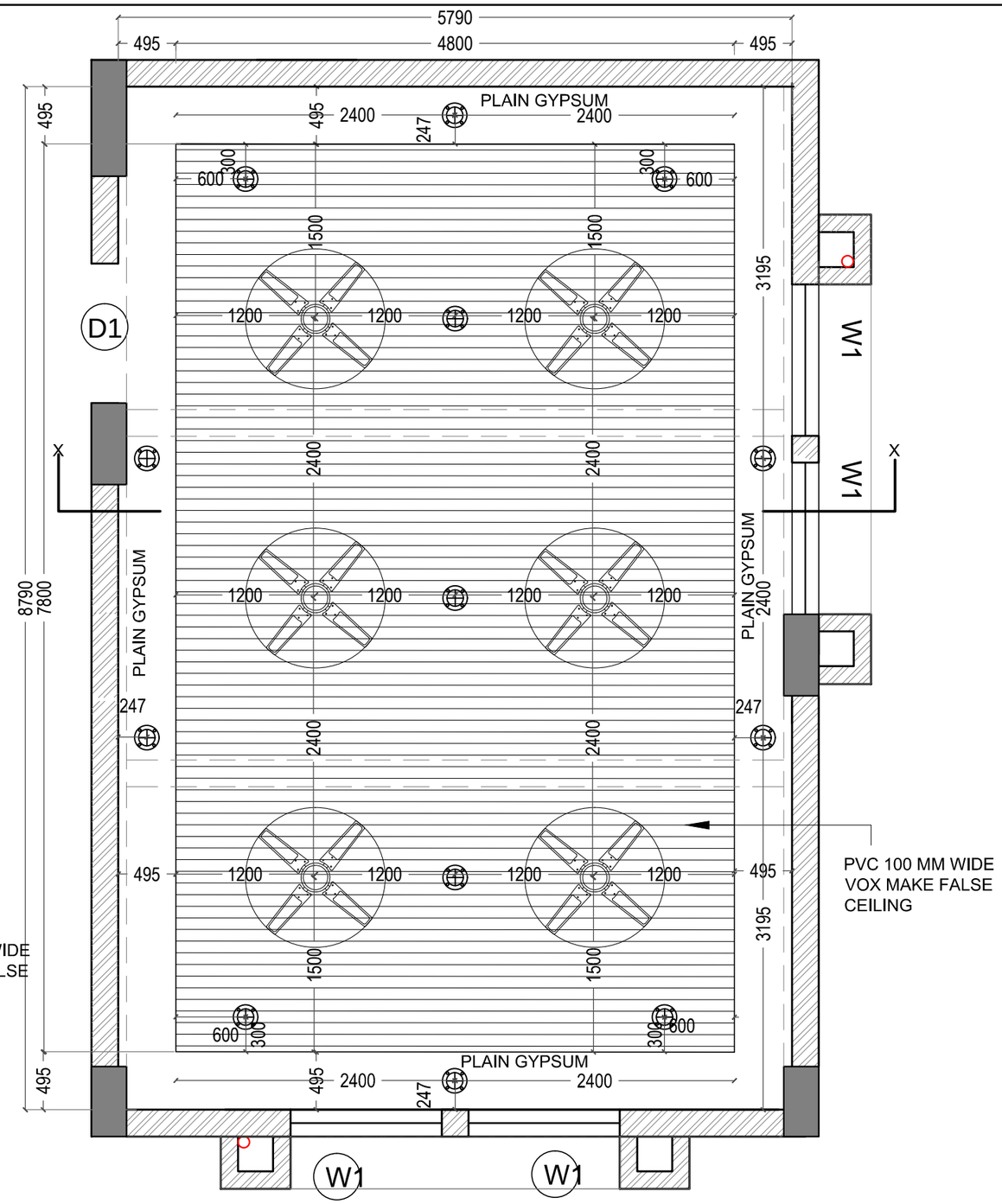

AUDITORIUM-PVC GYPSUM FALSE CEILING

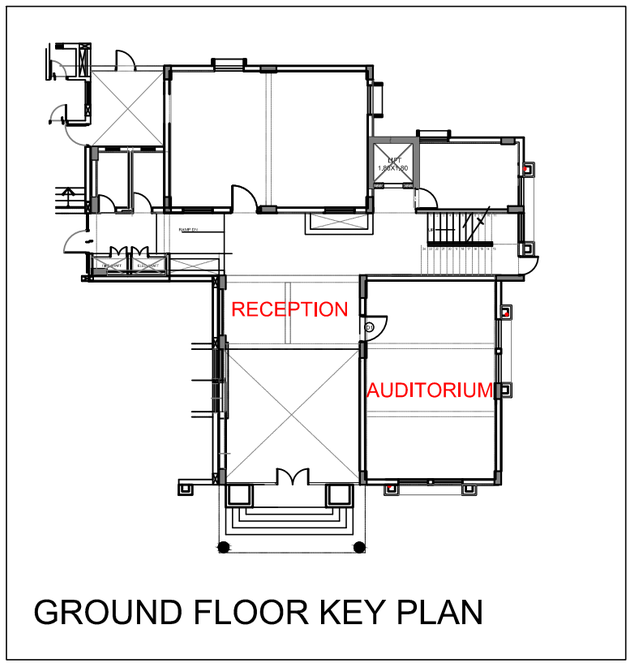

GROUND FLOOR KEY PLAN

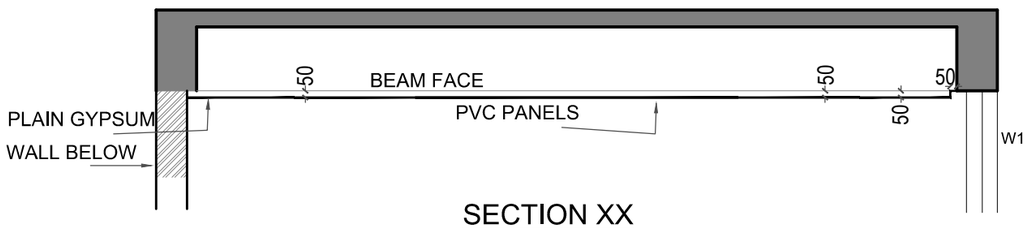

SECTION XX

DRG. NO.
IU/TLC/IN/122
DATE : 17.12.19

TITLE : FALSE CEILING LAYOUT - PLAIN GYPSUM

PROJECT : **TEACHER'S LEARNING CENTRE AT IUCAA CAMPUS**

CLIENT : THE DIRECTOR, IUCAA

SCALE : NTS | DATE : 31.08.18 | DESIGN : SAI

ARCHITECT
RAJEEV VISHWI ASRAO
ARCHITECTS & PLANNERS
'SANSKRUTI' 3RD FLOOR, PLOT NO. 2, SADASHIV PETH,
PUNE - 411 030. TEL NO. - 020 24530008, 24532008

NO | REVISIONS

ALL DIMENSIONS SHALL BE CHECKED & CO-RELATED WITH STRUCTURAL / WORKING DRAWINGs & AMBIGUITY SHALL BE IMMEDIATELY BROUGHT TO THE NOTICE OF THE ARCHITECTS BEFORE ITS EXECUTION.
THIS DRAWING SHALL NOT BE SCALED & ONLY WRITTEN DIMENSIONS TO BE FOLLOWED.
ALL DIMENSIONS ARE IN METER UNLESS OTHERWISE SPECIFIED.

THIS DRAWING IS THE PROPERTY OF M/S RAJEEV VISHWI ASRAO ARCHITECTS (PUNE) & NOT TO BE COPIED OR USED WITHOUT THEIR WRITTEN PERMISSION.

C:\Users\PC8\Desktop\TLC\IUCAA - TLC - FALSE CEILING-20.1.20.20.dwg

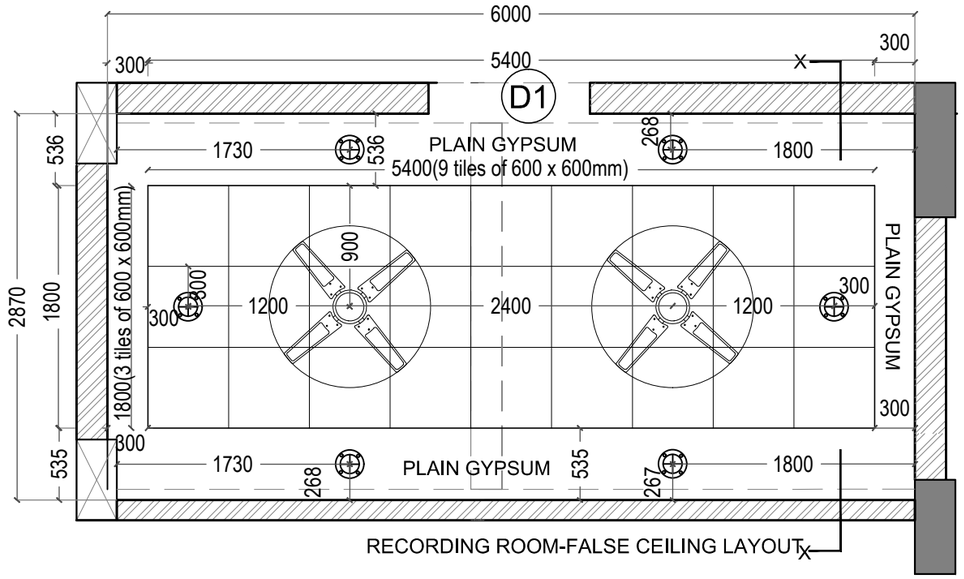

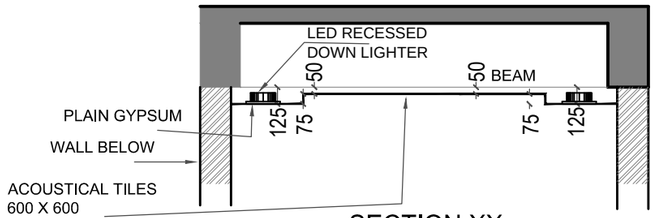

SECTION XX

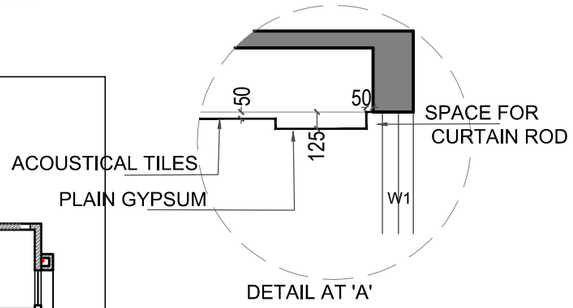

DETAIL AT 'A'

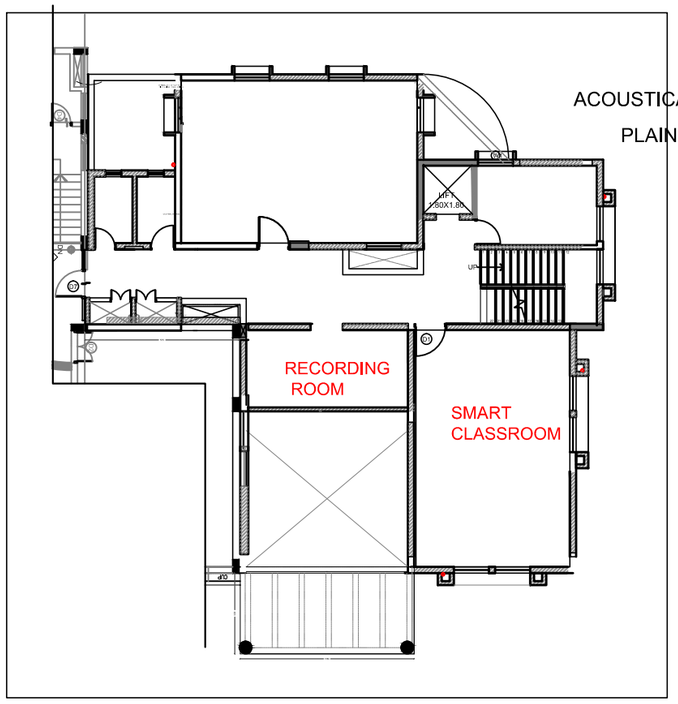

FIRST FLOOR KEY PLAN

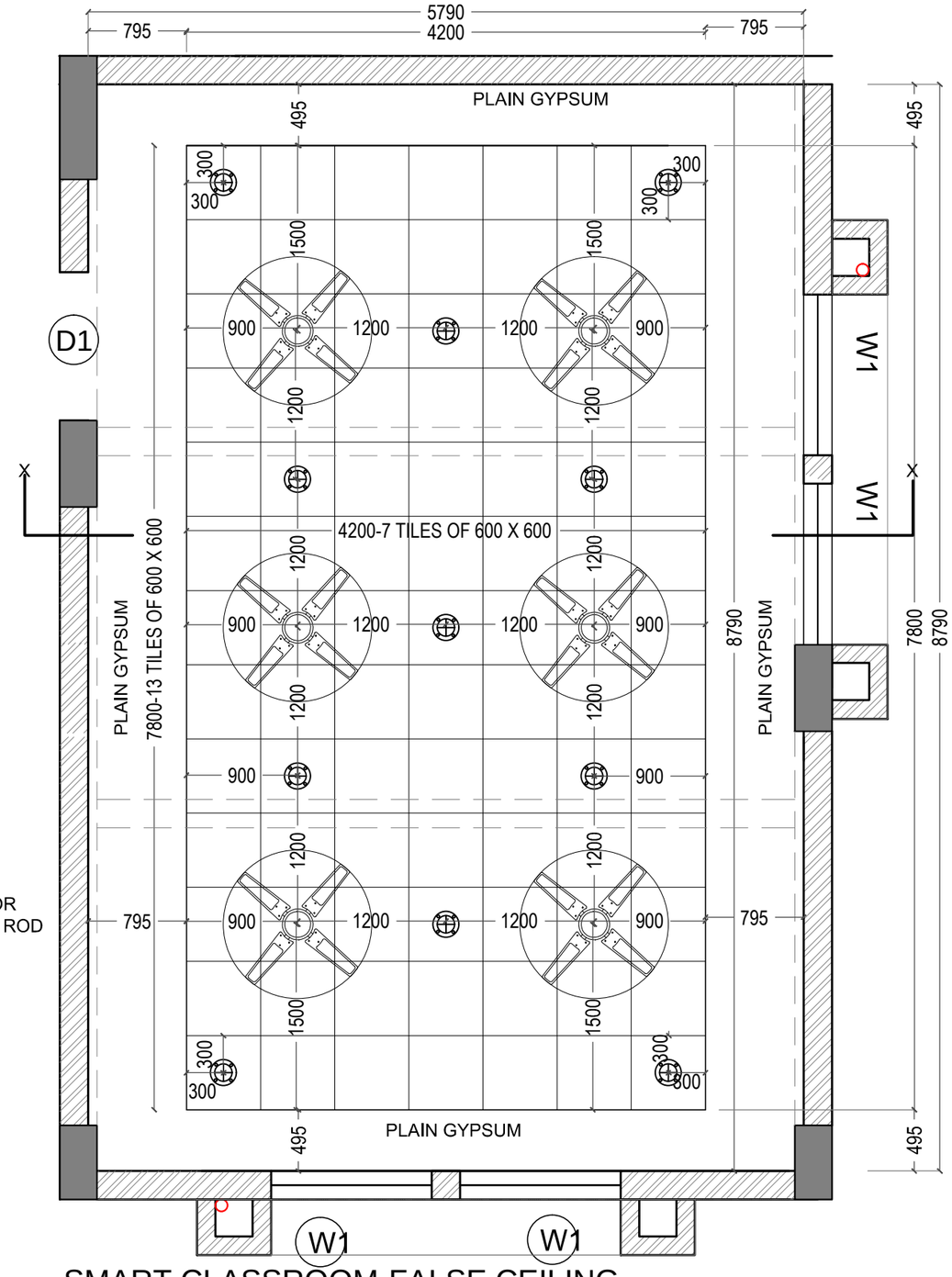

SMART CLASSROOM-FALSE CEILING

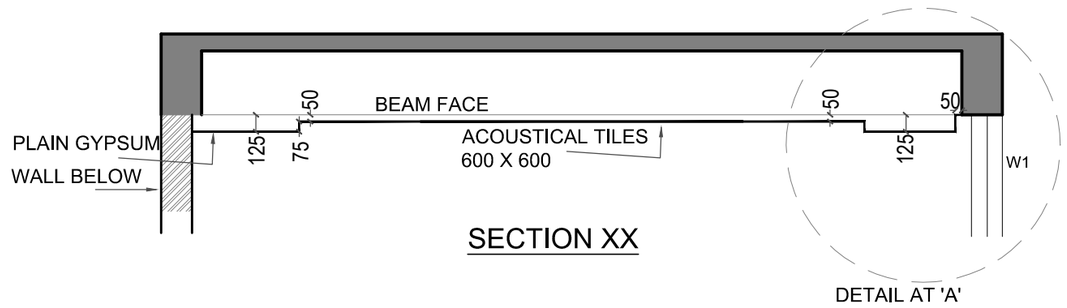

SECTION XX

DETAIL AT 'A'

DRG. NO.
IU/TLC/IN/233
DATE : 17.12.19

TITLE : FALSE CEILING LAYOUT-ACCOUSTICAL TILES
PROJECT : TEACHER'S LEARNING CENTRE AT IUCAA CAMPUS
CLIENT : THE DIRECTOR ,IUCAA
SCALE : NTS | DATE : 31.08.18 | DESIGN : SAI

ARCHITECT
RAJEEV VISHWI ASRAO
ARCHITECTS & PLANNERS
'SANSKRUTI' 3RD FLOOR, PLOT NO. 2, SADASHIV PETH,
PUNE - 411 030. TEL NO. - 020 24530008, 24532008

NO | REVISIONS

ALL DIMENSIONS SHALL BE CHECKED & CO-RELATED WITH STRUCTURAL / WORKING DRAWINGs & AMBIGUITY SHALL BE IMMEDIATELY BROUGHT TO THE NOTICE OF THE ARCHITECTS BEFORE ITS EXECUTION.
THIS DRAWING SHOULD NOT BE SCALED & ONLY WRITTEN DIMENSIONS TO BE FOLLOWED.
ALL DIMENSIONS ARE IN METER UNLESS OTHERWISE SPECIFIED.

THIS DRAWING IS THE PROPERTY OF
M/S RAJEEV VISHWI ASRAO ARCHITECTS (PUNE)
& NOT TO BE COPIED OR USED WITHOUT
THEIR WRITTEN PERMISSION.

C:\Users\PC\Desktop\TLC\IUCAA - TLC - FALSE CEILING-20.1.20.20.dwg

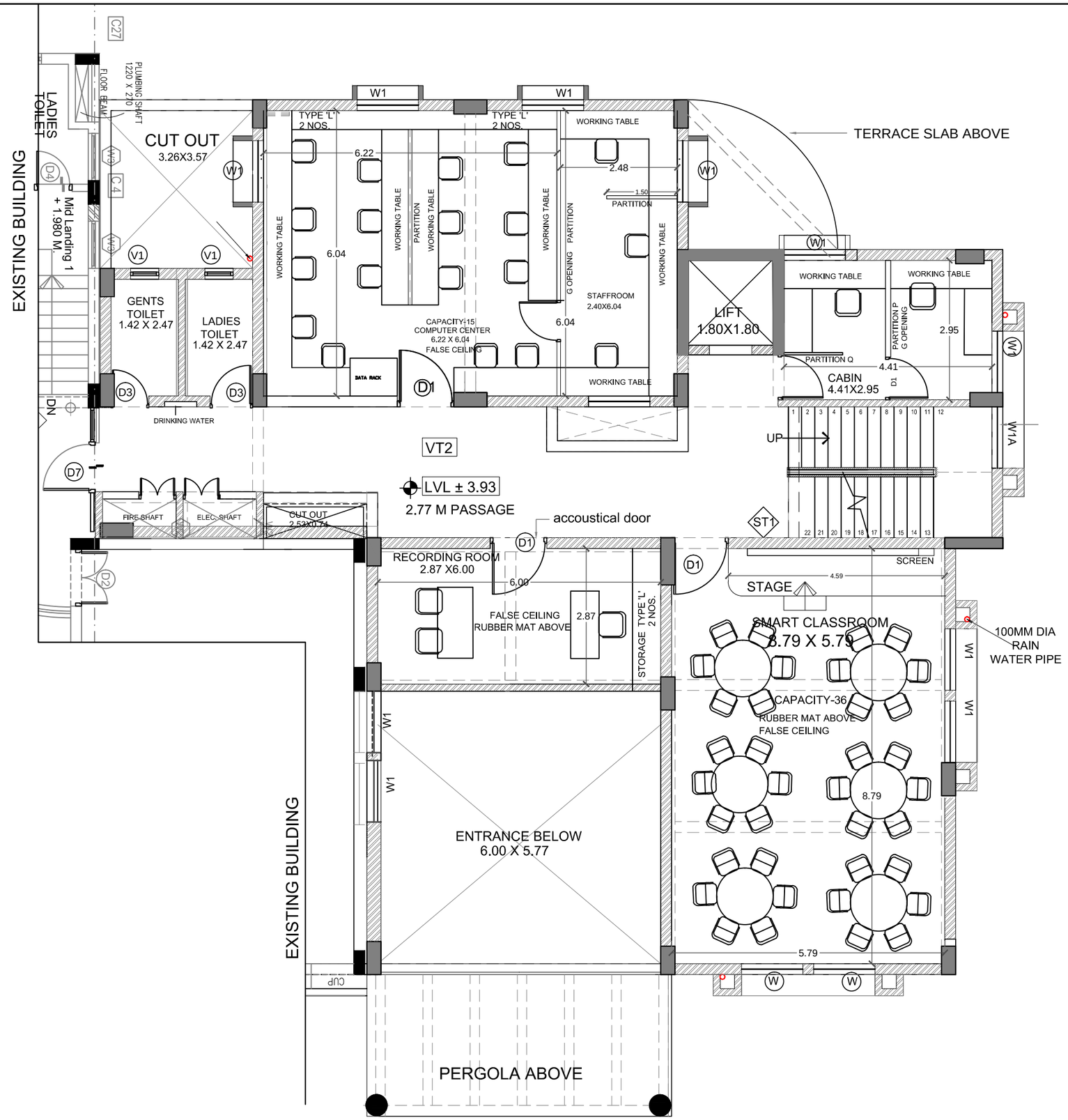

FIRST FLOOR PLAN

FIRST FLOOR FURNITURE LAYOUT

DRG. NO.
IU/TLC/IN/200
DATE : 17.1.2020

TITLE : FIRST FLOOR-FURNITURE LAYOUT
PROJECT : TEACHER'S LEARNING CENTRE AT IUCAA CAMPUS
CLIENT : THE DIRECTOR, IUCAA
SCALE : NTS | DATE : 31.08.18 | DESIGN : KAVITA

ARCHITECT
RAJEEV VISHWIASRAO
ARCHITECTS & PLANNERS
'SANSKRUTI' 3RD FLOOR, PLOT NO. 2, SAINASHEV PETH, PUNE - 411 030. TEL. NO. - 020 24530008, 24532608

NO. REVISIONS

ALL DIMENSIONS SHALL BE CHECKED & CO-RELATED WITH STRUCTURAL / WORKING DRAWINGS & AMBIGUITY SHALL BE IMMEDIATELY BROUGHT TO THE NOTICE OF THE ARCHITECTS BEFORE ITS EXECUTION.
THE DRAWINGS SHOULD NOT BE SCALED & ONLY WRITTEN DIMENSIONS TO BE FOLLOWED.
ALL DIMENSIONS ARE IN METER UNLESS OTHERWISE SPECIFIED.

THIS DRAWING IS THE PROPERTY OF M/S RAJEEV VISHWIASRAO ARCHITECTS,(PUNE) & NOT TO BE COPIED OR USED WITHOUT THEIR WRITTEN PERMISSION.

D:\Users\PC5\Desktop\TLC\IUCAA - TLC - FLOOR PLANS- 2018\2020.dwg

PARTITION	
TYPE	HEIGHT
P	2200 MM
Q	1500 MM
R	1500 MM
S	2955 MM
T	3390 MM
U	3390 MM

TYPE	FURNITURE TYPE	SIZE
A	TABLE	1200 X 600 MM
A	TABLE	1500 X 600 MM
A	TABLE	1800 X 600 MM
F	STORAGE CABINET	3435 X 600 MM
L	LAB TABLE	IUCAA

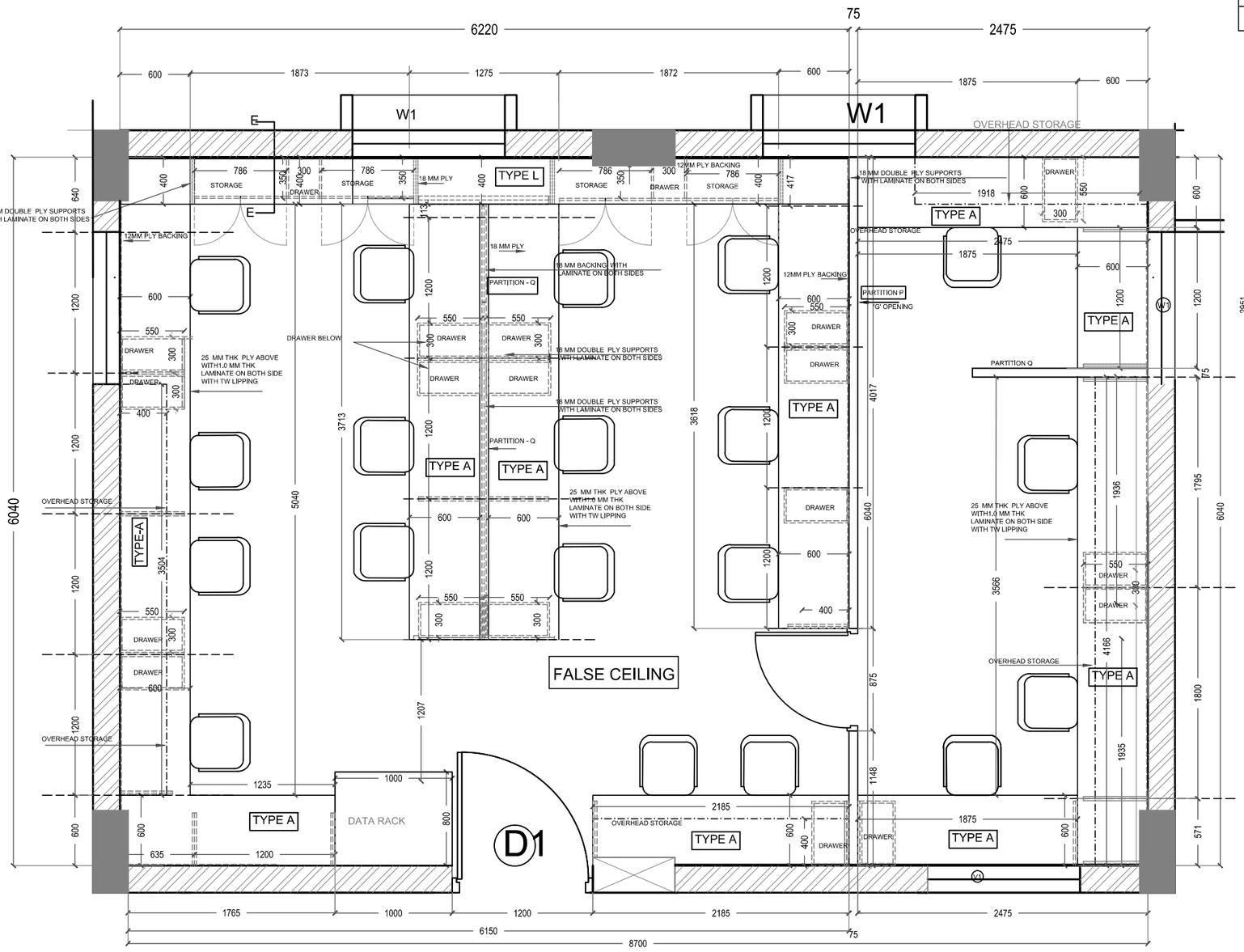

ROOM 3- COMPUTER LAB

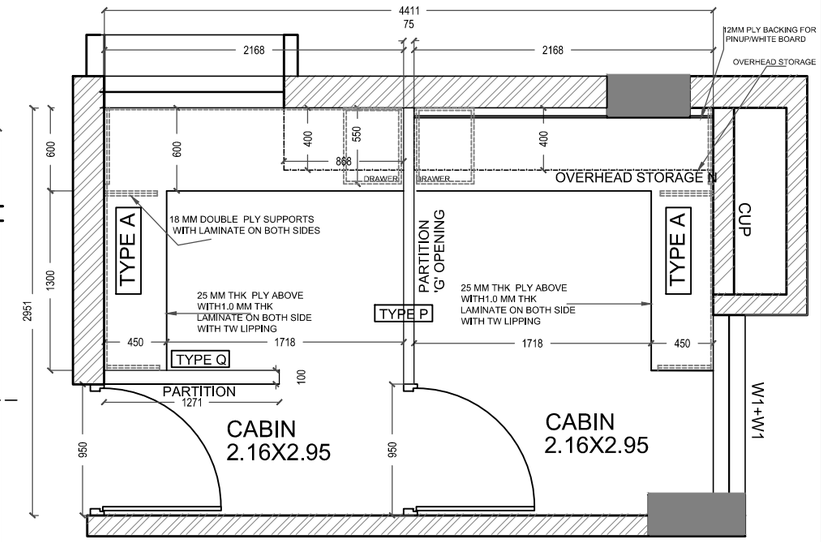

ROOM 4 - CABIN

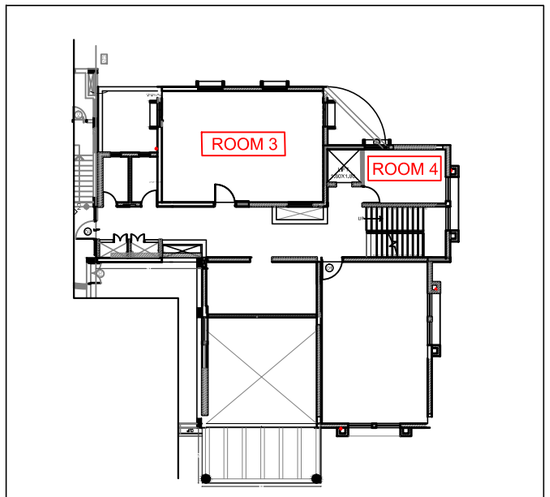

FIRST FLOOR KEY PLAN

THIS DRAWING IS THE PROPERTY OF M/S RAJEEV VISHWASRAO ARCHITECTS,(PUNE) & NOT TO BE COPIED OR USED WITHOUT THEIR WRITTEN PERMISSION.

C:\Users\PC6\Desktop\TLC\IUCAA - TLC - ROOM DETAIL LAYOUTS- 20.1.2020.dwg

ALL DIMENSIONS SHALL BE CHECKED & CO-RELATED WITH STRUCTURAL / WORKING DRAWINGs & AMBIGUITY SHALL BE IMMEDIATELY BROUGHT TO THE NOTICE OF THE ARCHITECTS BEFORE ITS EXECUTION.

THIS DRAWING SHOULD NOT BE SCALED & ONLY WRITTEN DIMENSIONS TO BE FOLLOWED.

ALL DIMENSIONS ARE IN METER UNLESS OTHERWISE SPECIFIED.

NO.	REVISIONS

ARCHITECT

RAJEEV VISHWASRAO

ARCHITECTS & PLANNERS

'SANSKRUTI' 3RD FLOOR, PLOT NO. 2, SADASHIV PETH, PUNE - 411 030. TEL. NO. - 020 24530008, 24532008

TITLE : FIRST FLOOR FURNITURE DETAIL LAYOUT

PROJECT : **TEACHER'S LEARNING CENTRE AT IUCAA CAMPUS**

CLIENT :THE DIRECTOR ,IUCAA

SCALE : NTS | DATE : 31.08.18 | DESIGN : KAVITA

DRG. NO. IU/TLC/N/210

DATE : 09.12.19

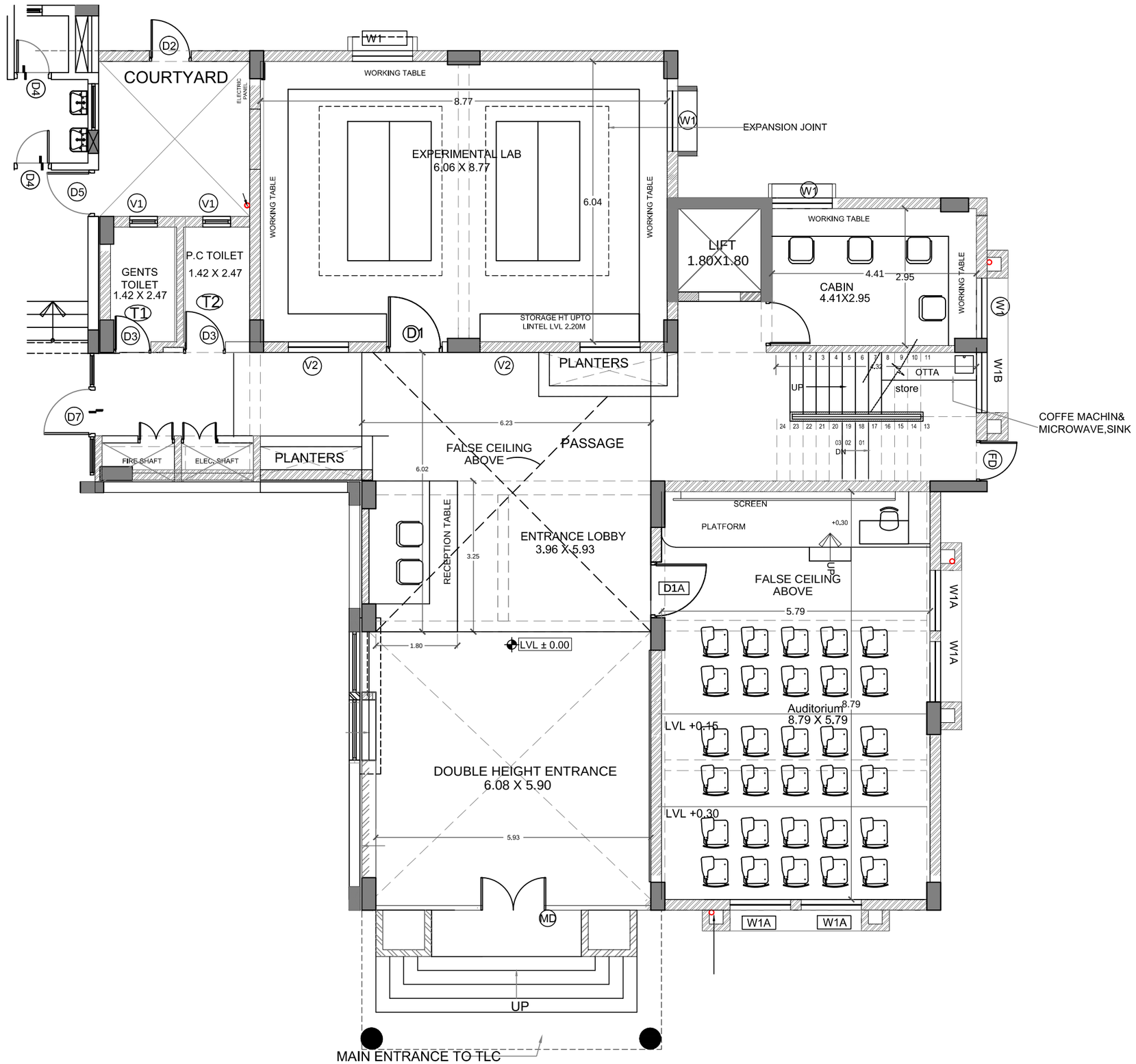

GROUND FLOOR PLAN

GROUND FLOOR FURNITURE LAYOUT

DRG. NO. IU/TLC/IN/100

DATE : 17.1.2020

TITLE : GROUND FLOOR-FURNITURE LAYOUT

PROJECT : TEACHER'S LEARNING CENTRE AT IUCAA CAMPUS

CLIENT : THE DIRECTOR ,IUCAA

SCALE : NTS | DATE : 31.08.18 | DESIGN : KAVITA

ARCHITECT
RAJEEV VISHWJASRAO
ARCHITECTS & PLANNERS
'SANSKRUTI' 3RD FLOOR, PLOT NO. 2, SADASHIV PETH, PUNE - 411 030. TEL. NO. - 020 24530008, 24532608

NO	REVISIONS

ALL DIMENSIONS SHALL BE CHECKED & CO-RELATED WITH STRUCTURAL / WORKING DRAWINGS & AMBIGUITY SHALL BE IMMEDIATELY BROUGHT TO THE NOTICE OF THE ARCHITECTS BEFORE ITS EXECUTION.
THIS DRAWING SHOULD NOT BE SCALED & ONLY WRITTEN DIMENSIONS TO BE FOLLOWED.
ALL DIMENSIONS ARE IN METER UNLESS OTHERWISE SPECIFIED.

THIS DRAWING IS THE PROPERTY OF M/S RAJEEV VISHWJASRAO ARCHITECTS,(PUNE) & NOT TO BE COPIED OR USED WITHOUT THEIR WRITTEN PERMISSION.

D:\Users\VOS\Desktop\TLC\IUCAA - TLC - FLOOR PLANS- 311.dwg

PARTITION

TYPE	HEIGHT
P	2200 MM
Q	1500 MM
R	1500 MM
S	2955 MM
T	3390 MM
U	3390 MM

TYPE	FURNITURE TYPE	SIZE
A	TABLE	1200 X 600 MM
A	TABLE	1500 X 600 MM
A	TABLE	1800 X 600 MM
F	STORAGE CABINET	3435 X 600 MM
L	LAB TABLE	IUCAA

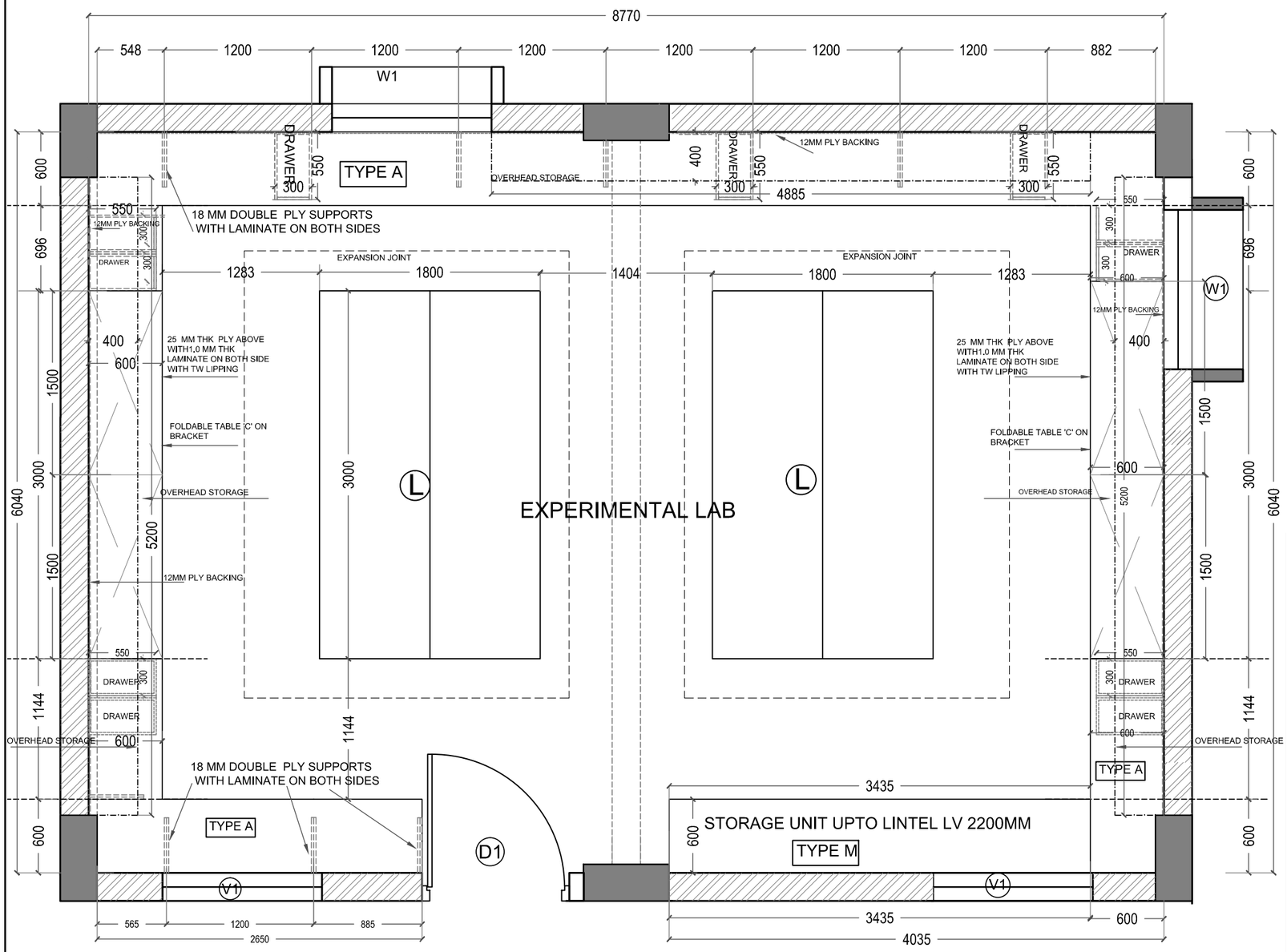

ROOM 1 - EXPERIMENTAL LAB

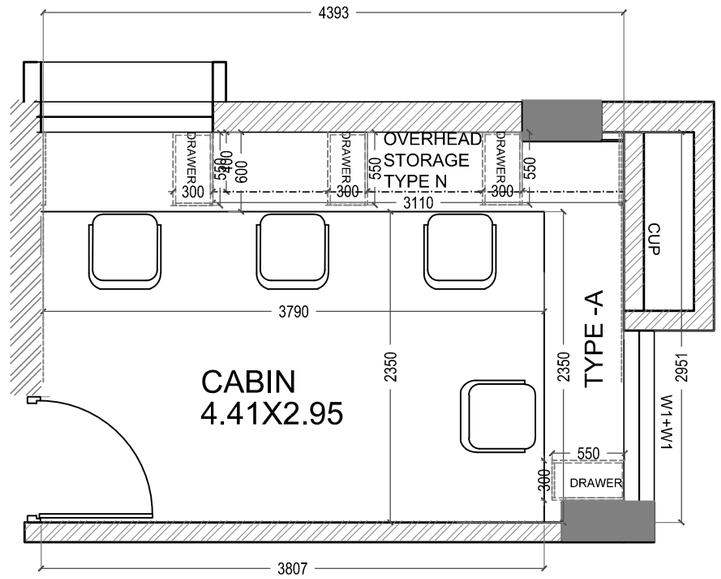

ROOM 2 - CABIN

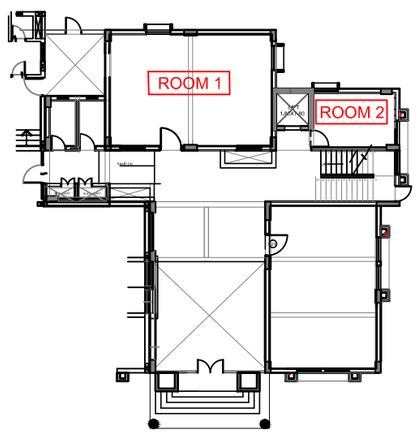

GROUND FLOOR KEY PLAN

TABLE A
STORAGE M
OVERHEAD
STORAGE N

THIS DRAWIING IS THE PROPERTY OF
M/S RAJEEV VISHW1ASRAO ARCHITECTS,(PUNE)
& NOT TO BE COPIED OR USED WIITHOUT
THEIR WIRITTEN PERMISSION.

C:\Users\PC6\Desktop\TLC\IUCAA - TLC - ROOM DETAIL LAYOUTS- 20.1.2020.dwg

ALL DIMENSIONS SHALL BE CHECKED & CO–RELATED WI1TH STRUCTURAL / WI0RKING DRAWI1INGs & AMBIGUITY SHALL BE IMMEDIATELY BROUGHT TO THE NOTICE OF THE ARCHITECTS BEFORE ITS EXECUTION.

THIS DRAWI1ING SHOULD NOT BE SCALED & ONLY WI1RITTEN DIMENSIONS TO BE FOLLOWI1ED.

ALL DIMENSIONS ARE IN METER UNLESS OTHERWI1SE SPECIFIED.

NO.	REVISIONS

ARCHITECT
RAJEEV VISHW1ASRAO
ARCHITECTS & PLANNERS
'SANSKRUTI' 3RD FLOOR, PLOT NO. 2, SADASHIV PETH, PUNE - 411 030. TEL. NO. - 020 24530008, 24532008

TITLE : GROUND FLOOR FURNITURE DETAILS

PROJECT : **TEACHER'S LEARNING CENTRE AT IUCAA CAMPUS**

CLIENT :THE DIRECTOR ,IUCAA

SCALE : NTS | DATE : 31.08.18 | DESIGN : KAVITA

DRG. NO.
IU/TLC/N/110

DATE :
09.12.19

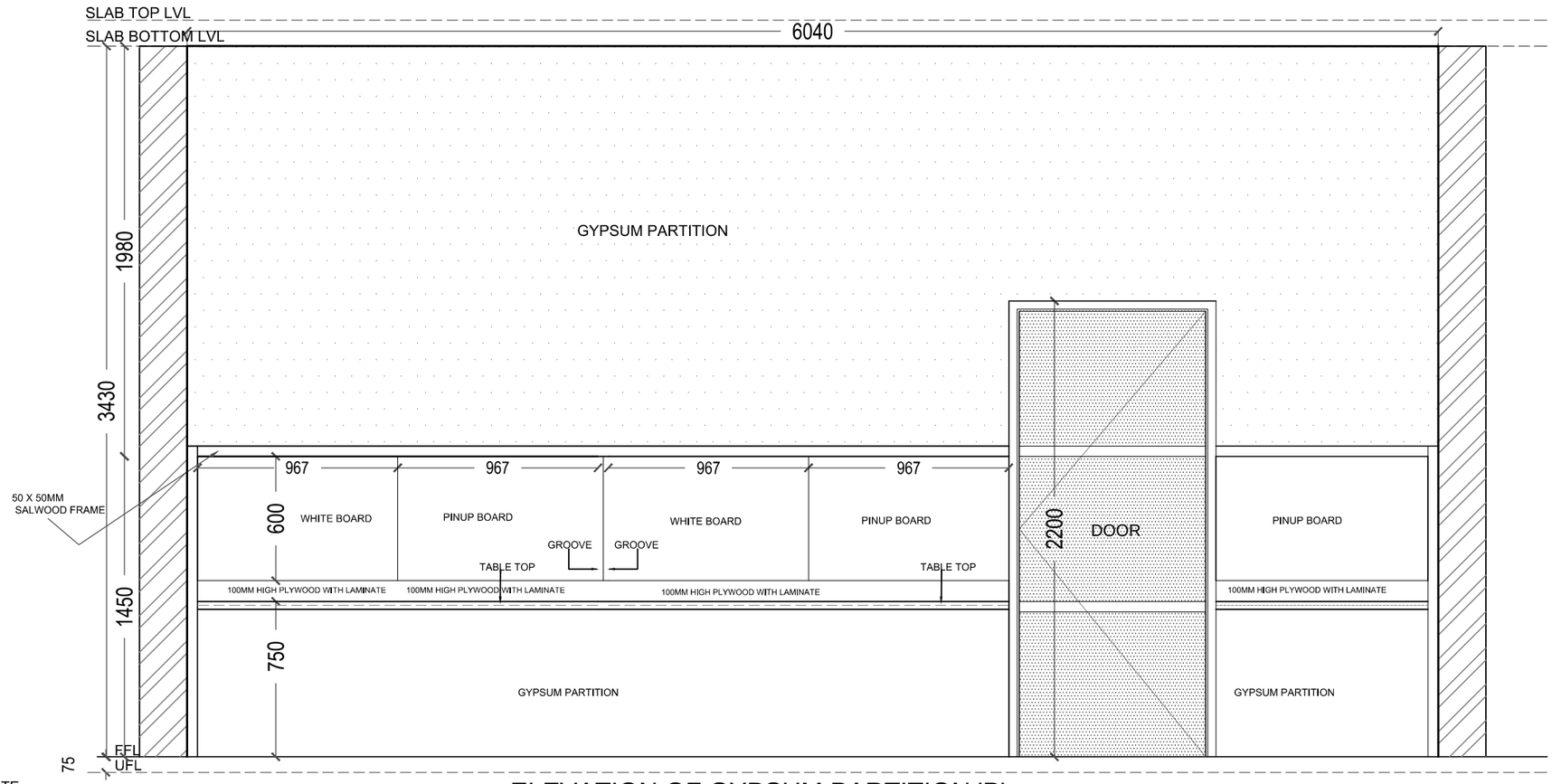

ELEVATION OF GYPSUM PARTITION 'P'

NOTE :
75 MM THICK GYP WALL WITH 70 MM GYP STEEL ULTRA ' C ' STUD AND 12.5 MM THICK PLAIN GYP ROCK BOARD ON BOTH SIDE WITH CEILING AND FLOOR CHANNELS FINISHED WITH GYPSUM JOINTS TAPE AND JOINTS COMPOUND

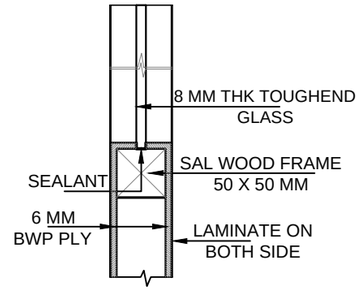

DETAIL AT Y

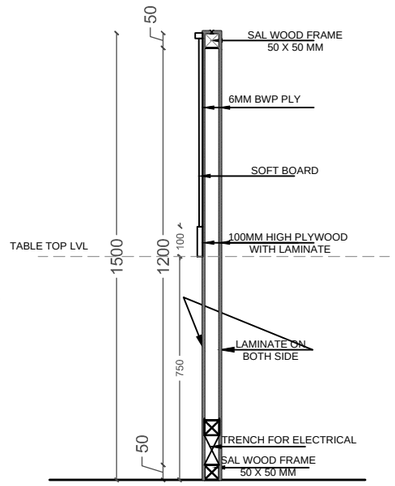

SECTION XX

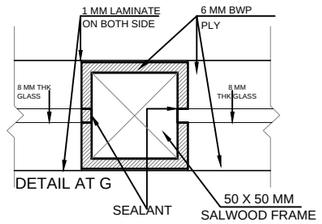

DETAIL AT G

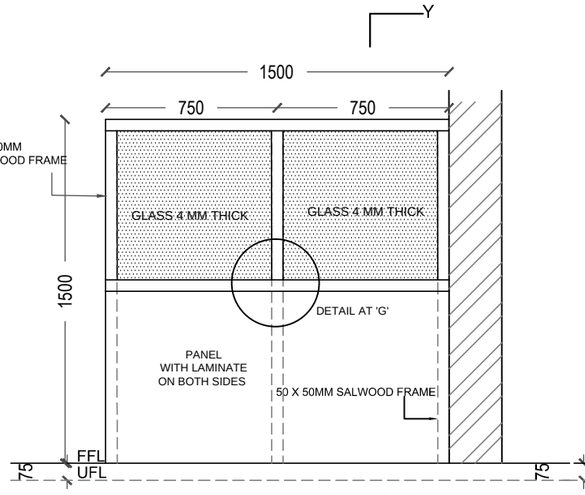

ELEVATION OF WOODEN PARTITION 'Q'

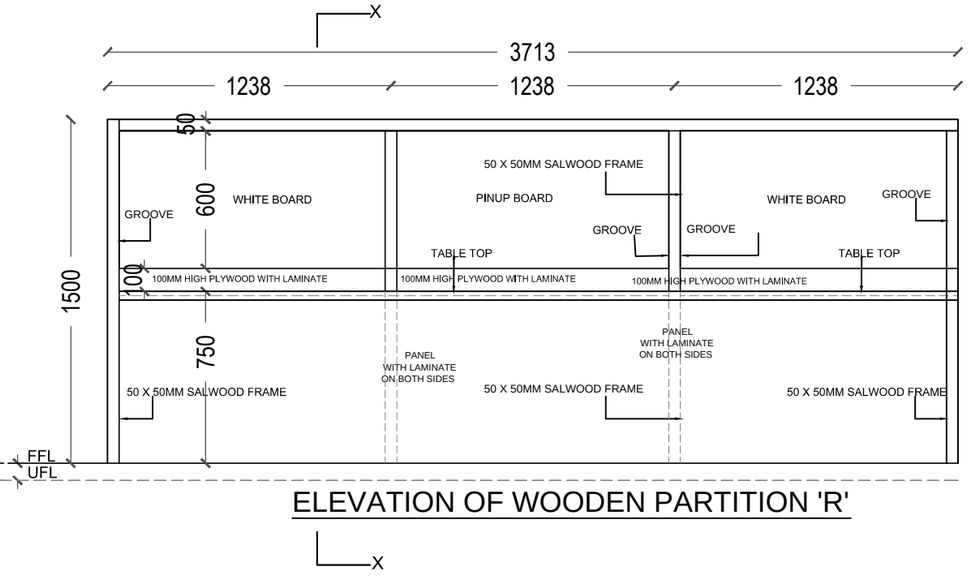

ELEVATION OF WOODEN PARTITION 'R'

GYPSUM PARTITION 'P'

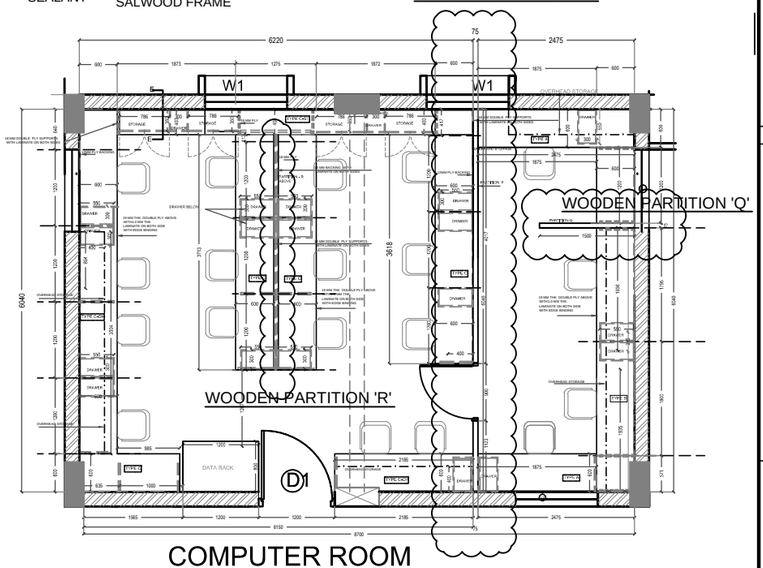

COMPUTER ROOM
1ST FLOOR

FIRST FLOOR- PARTITION P,Q,R DETAILS

ALL DIMENSIONS SHALL BE CHECKED & CO-RELATED WITH STRUCTURAL / WORKING DRAWINGs & AMBIGUITY SHALL BE IMMEDIATELY BROUGHT TO THE NOTICE OF THE ARCHITECTS BEFORE ITS EXECUTION.
DRAWINGS TO BE READ AND NOT SCALED & ONLY WRITTEN DIMENSIONS TO BE FOLLOWED.
ALL DIMENSIONS ARE IN METER UNLESS OTHERWISE SPECIFIED.

THE DRAWING IS THE PROPERTY OF M/S RAJEEV VISHWJASRAO ARCHITECTS (PUNE) & NOT TO BE COPIED OR USED WITHOUT THEIR WRITTEN PERMISSION.

C:\Users\PC\Desktop\TLC\IUCAA - TLC - PARTITIONS- 20 1.2020.dwg

NO. REVISIONS

ARCHITECT
RAJEEV VISHWJASRAO
ARCHITECTS & PLANNERS
'SANSKRUTI' 3RD FLOOR, PLOT NO. 3, SADASHIV PETH, PUNE - 411 030. TEL. NO. - 020 24530008, 24532008

TITLE : TYPICAL PARTITION P,Q,R DETAILS
PROJECT : TEACHER'S LEARNING CENTRE AT IUCAA CAMPUS
CLIENT : THE DIRECTOR ,IUCAA
SCALE : NTS | DATE : 31.08.18 | DESIGN : KAVITA

DRG. NO. IU/TLC/IN/221
DATE : 17.12.19

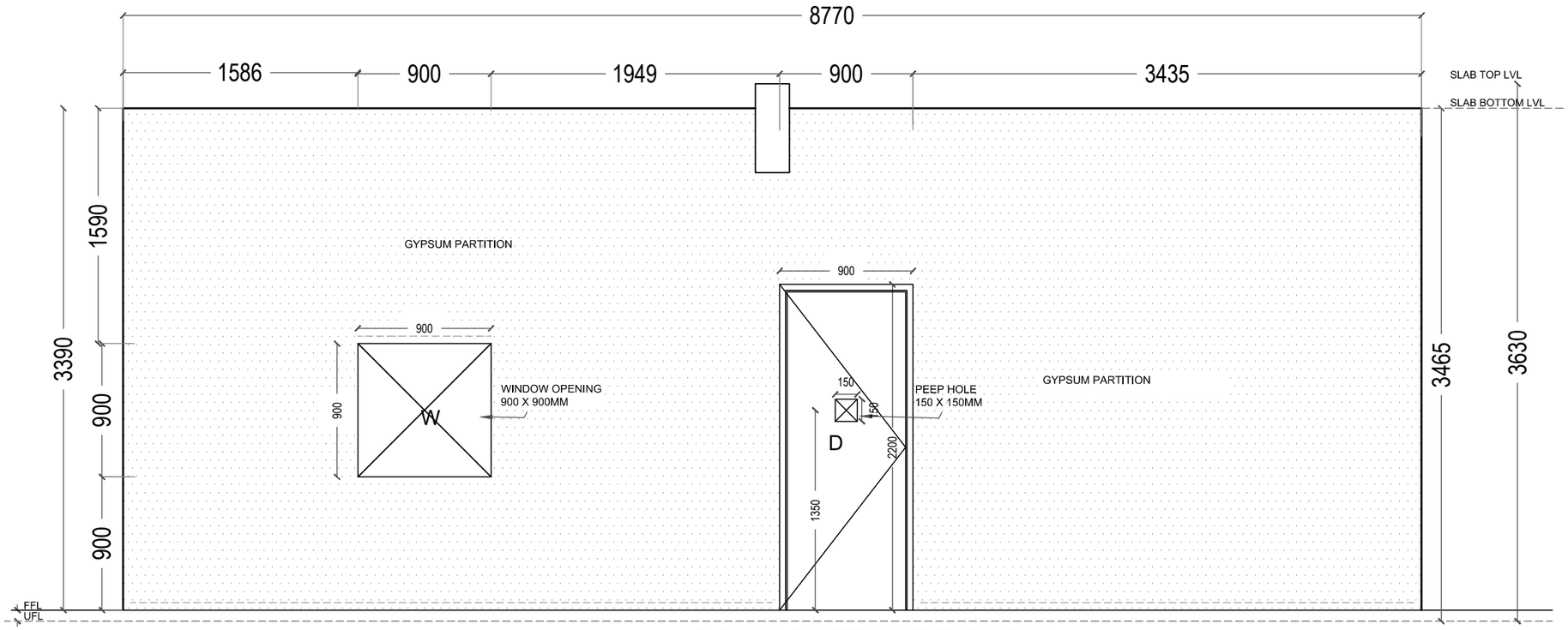

GYPSUM PARTITION 'T' ELEVATION

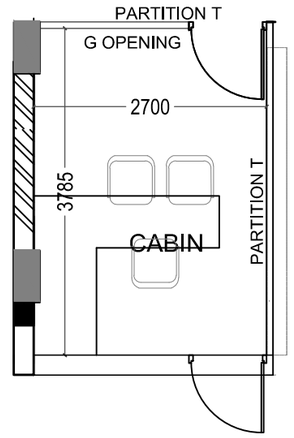

KEY PLAN-CABIN NEAR LOUNGE

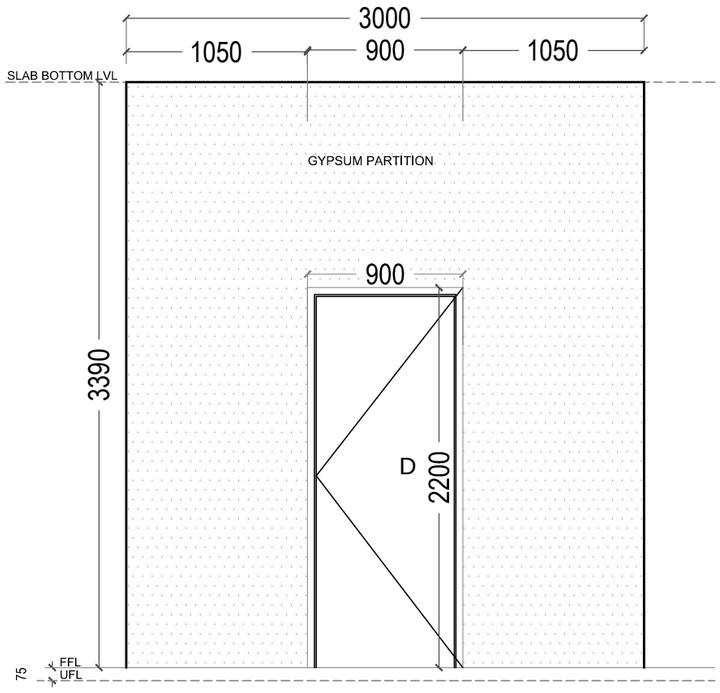

GYPSUM PARTITION 'U' ELEVATION

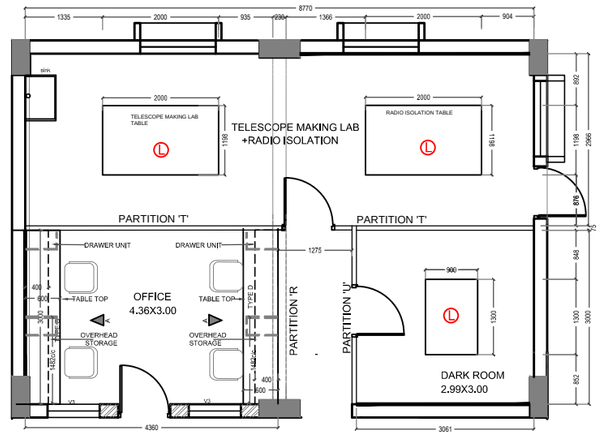

OFFICE,LAB,DARK ROOM
2ND FLOOR

NOTE :

75 MM THICK GYP WALL WITH 70 MM GYP STEEL ULTRA ' C ' STUD AND 12.5 MM THICK PLAIN GYP ROCK BOARD ON BOTH SIDE WITH CEILING AND FLOOR CHANNELS FINISHED WITH GYPSUM JOINTS TAPE AND JOINTS COMPOUND

SECOND FLOOR-
PARTITION T,U DETAILS

DRG. NO.
IU/TLC/N/332
DATE : 17.12.19

TITLE : TYPICAL GYPSUM PARTITION S,T,U DETAILS
PROJECT : TEACHER'S LEARNING CENTRE AT IUCAA CAMPUS
CLIENT : THE DIRECTOR ,IUCAA
SCALE : NTS | DATE : 31.08.18 | DESIGN : KAVITA

ARCHITECT
RAJEEV VISHWI ASRAO
ARCHITECTS & PLANNERS
'SANSKRUTI' 3RD FLOOR, PLOT NO. 2, SADASHIV PETH, PUNE - 411 030. TEL NO. - 020 24530008, 24532008

NO. | REVISIONS

ALL DIMENSIONS SHALL BE CHECKED & CO-RELATED WITH STRUCTURAL / WORKING DRAWINGs & AMBIGUITY SHALL BE IMMEDIATELY BROUGHT TO THE NOTICE OF THE ARCHITECTS BEFORE ITS EXECUTION.
THIS DRAWING MUST NOT BE SCALED & ONLY WRITTEN DIMENSIONS TO BE FOLLOWED.
ALL DIMENSIONS ARE IN METER UNLESS OTHERWISE SPECIFIED.

THIS DRAWING IS THE PROPERTY OF MIS RAJEEV VISHWI ASRAO ARCHITECTS,(PUNE) & NOT TO BE COPIED OR USED WITHOUT THEIR WRITTEN PERMISSION.

C:Users\PC\Desktop\TLC\IUCAA - TLC - PARTITIONS 20 2.2020.dwg

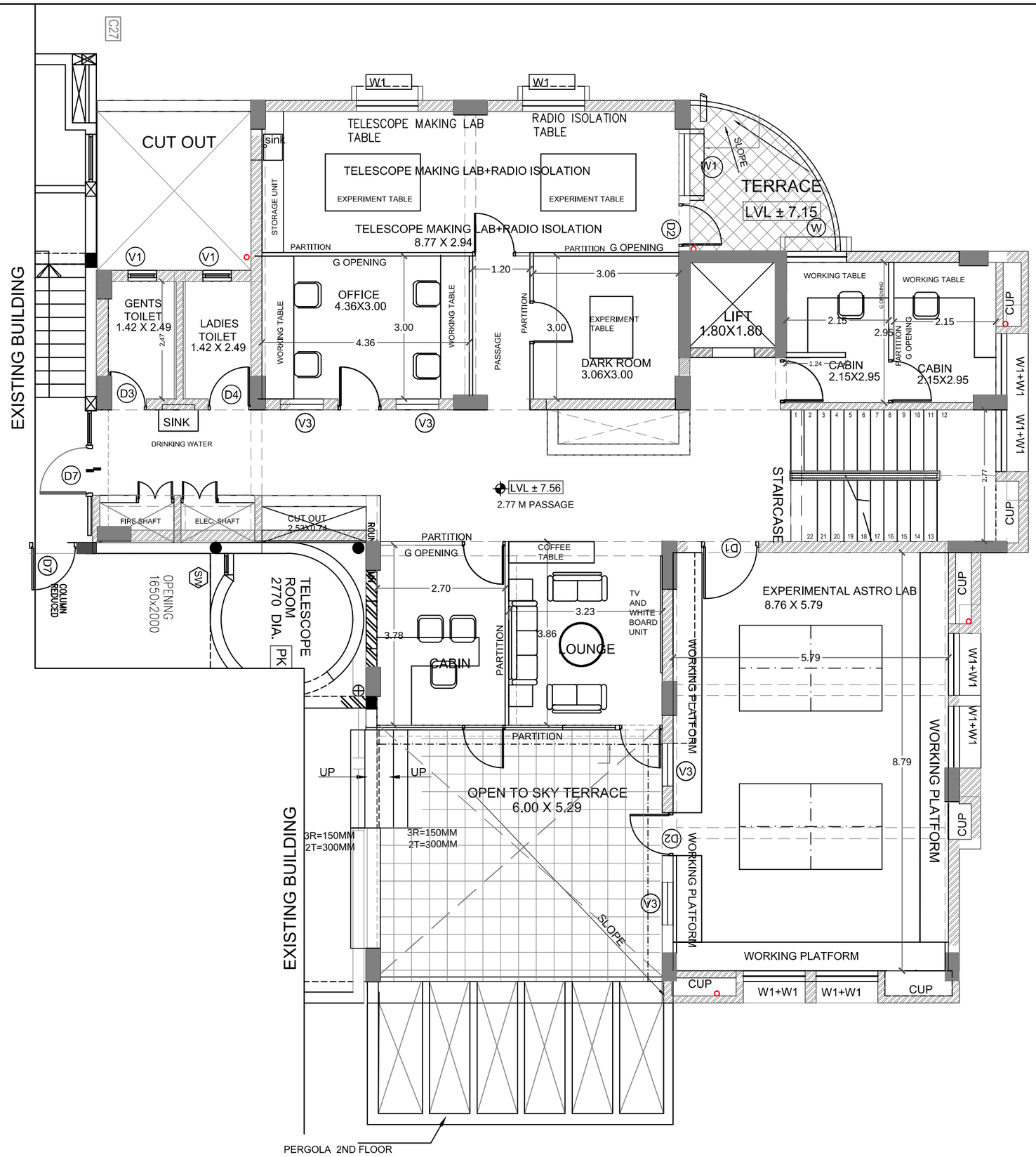

SECOND FLOOR PLAN

SECOND FLOOR FURNITURE LAYOUT

DRG. NO.
IU/TLC/IN/300
DATE : 17.1.2020

TITLE : SECOND FLOOR+FURNITURE LAYOUT
PROJECT : TEACHER'S LEARNING CENTRE AT IUCAA CAMPUS
CLIENT : THE DIRECTOR, IUCAA
SCALE : NTS | DATE : 31.08.18 | DESIGN : KAVITA

ARCHITECT
RAJEEV VISHWASRAO
ARCHITECTS & PLANNERS
'SANSKRUTI' 3RD FLOOR, PLOT NO. 2, SAINAGRI, PETH, PUNE - 411 030. TEL. NO. - 020 24530008, 24532008

NO.	REVISIONS

ALL DIMENSIONS SHALL BE CHECKED & CO-RELATED WITH STRUCTURAL / WORKING DRAWINGs & AMBIGUITY SHALL BE IMMEDIATELY BROUGHT TO THE NOTICE OF THE ARCHITECTS BEFORE ITS EXECUTION.
THIS DRAWING SHALL NOT BE SCALED & ONLY WRITTEN DIMENSIONS TO BE FOLLOWED.
ALL DIMENSIONS ARE IN METER UNLESS OTHERWISE SPECIFIED.

THIS DRAWING IS THE PROPERTY OF M/S RAJEEV VISHWYASRAO ARCHITECTS (PUNE) & NOT TO BE COPIED OR USED WITHOUT THEIR WRITTEN PERMISSION.

D:\Users\VCS\Desktop\TLC\IUCAA - TLC - FLOOR PLANS- 2nd.dwg

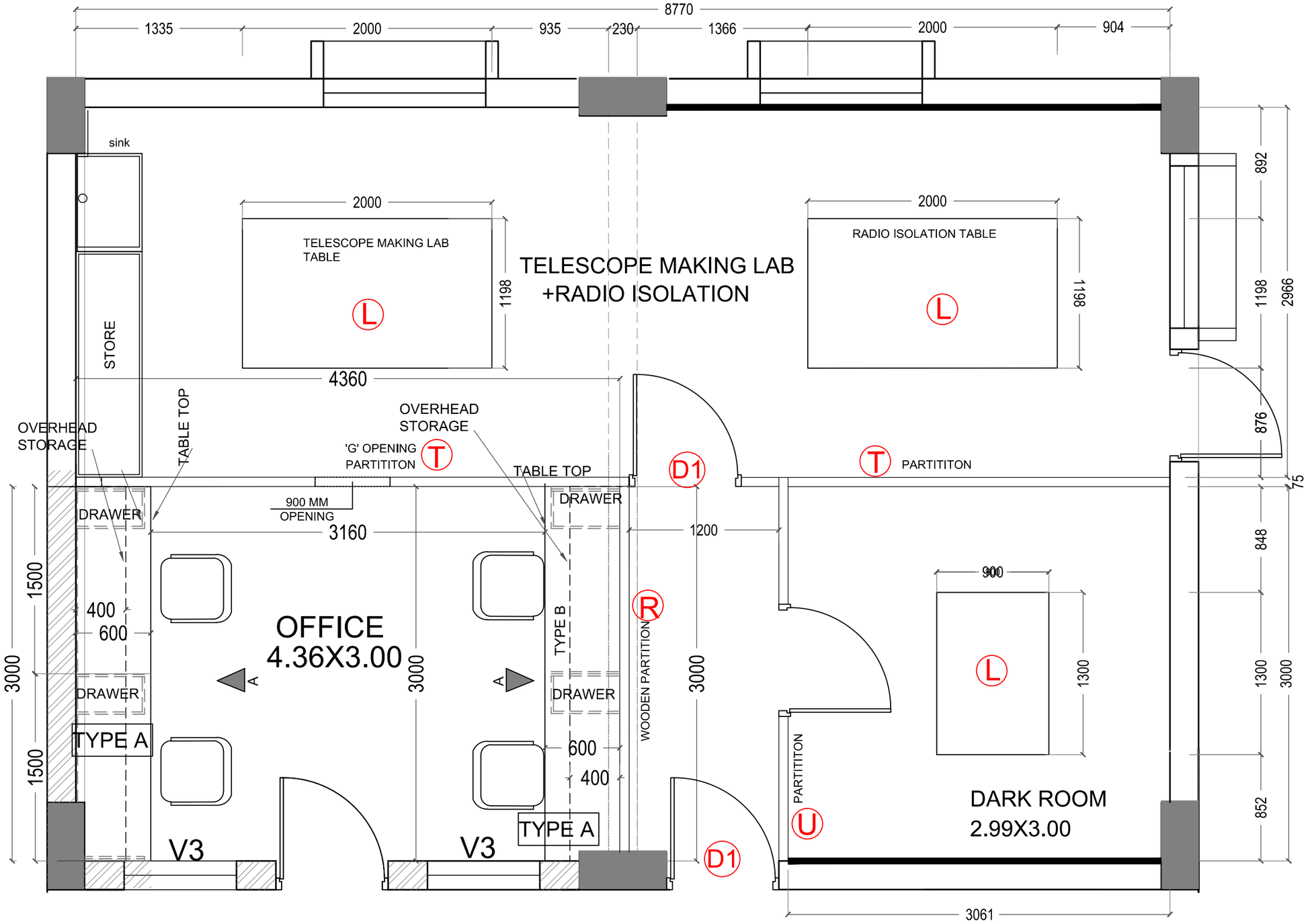

ROOM 5 - TELESCOPE MAKING ROOM
OFFICE,DARK ROOM

THIS DRAWING IS THE PROPERTY OF
M/S RAJEEV VISHWASRAO ARCHITECTS,(PUNE)
& NOT TO BE COPIED OR USED WITHOUT
THEIR WRITTEN PERMISSION.

C:\Users\PC6\Desktop\TLC\IUCAA - TLC - ROOM DETAIL LAYOUTS- 20.1.2020.dwg

ALL DIMENSIONS SHALL BE CHECKED & CO-RELATED WITH STRUCTURAL / WORKING DRAWINGs & AMBIGUITY SHALL BE IMMEDIATELY BROUGHT TO THE NOTICE OF THE ARCHITECTS BEFORE ITS EXECUTION.

THIS DRAWING SHOULD NOT BE SCALED & ONLY WRITTEN DIMENSIONS TO BE FOLLOWED.

ALL DIMENSIONS ARE IN METER UNLESS OTHERWISE SPECIFIED.

NO.	REVISIONS

ARCHITECT
RAJEEV VISHWASRAO
ARCHITECTS & PLANNERS
'SANSKRUTI' 3RD FLOOR, PLOT NO. 2, SADASHIV PETH, PUNE - 411 030. TEL. NO. - 020 24530008, 24532008

TITLE : SECOND FLOOR FURNITURE DETAIL LAYOUT
PROJECT : **TEACHER'S LEARNING CENTRE AT IUCAA CAMPUS**
CLIENT :THE DIRECTOR ,IUCAA
SCALE : NTS | DATE : 31.08.18 | DESIGN : KAVITA

N S E W

DRG. NO.
IU/TLC/N/310A
DATE :
09.12.19

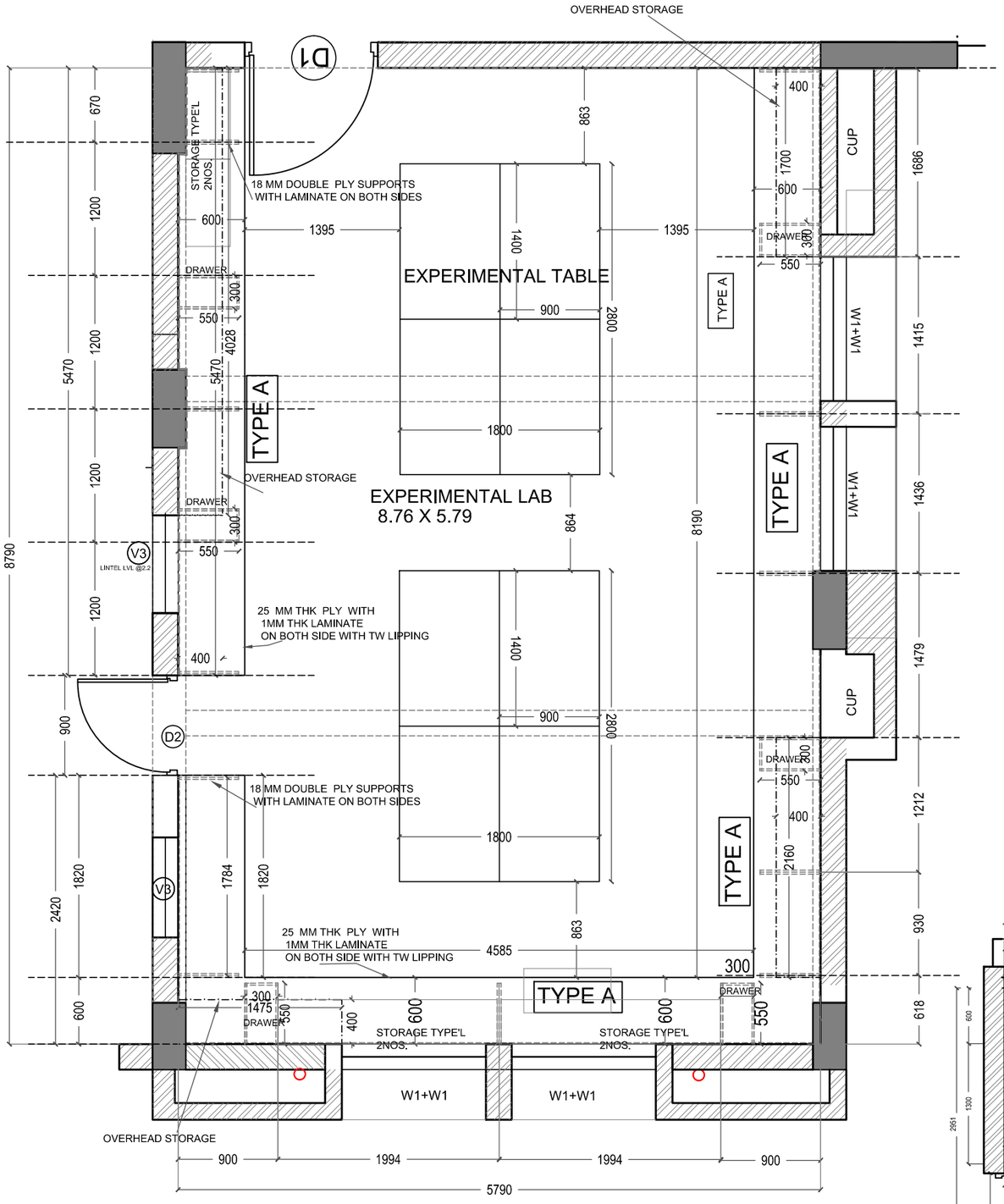

ROOM 7 - EXPERIMENTAL LAB

PARTITION

TYPE	HEIGHT
P	2200 MM
Q	1500 MM
R	1500 MM
S	2955 MM
T	3390 MM
U	3390 MM

TYPE	FURNITURE TYPE	SIZE
A	TABLE	1200 X 600 MM
A	TABLE	1500 X 600 MM
A	TABLE	1800 X 600 MM
F	STORAGE CABINET	3435 X 600 MM
L	LAB TABLE	IUCAA

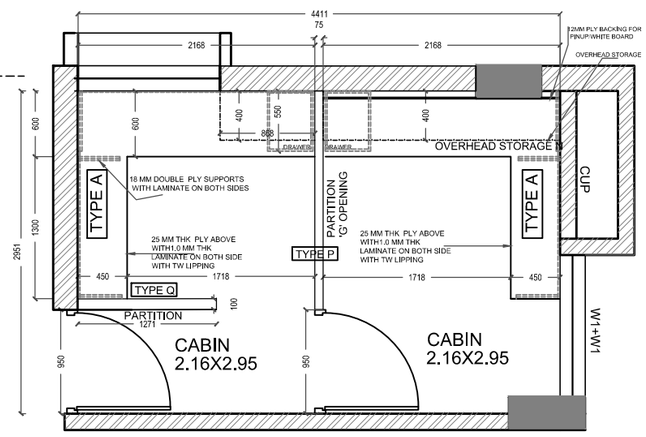

ROOM 6 - CABIN

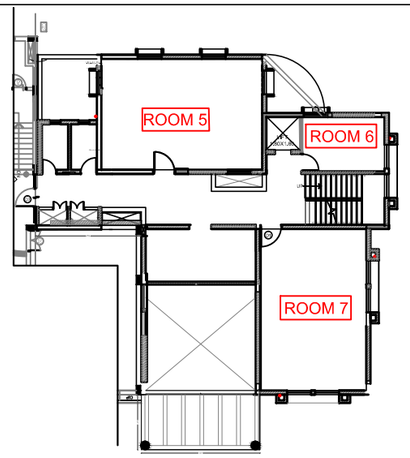

SECOND FLOOR KEY PLAN

THIS DRAWIING IS THE PROPERTY OF
M/S RAJEEV VISHW1ASRAO ARCHITECTS,(PUNE)
& NOT TO BE COPIED OR USED WIITHOUT THEIR WIRITTEN PERMISSION.

C:\Users\PC6\Desktop\TLC\IUCAA - TLC - ROOM DETAIL LAYOUTS- 20.1.2020.dwg

ALL DIMENSIONS SHALL BE CHECKED & CO-RELATED WIITH STRUCTURAL / WIORKING DRAWIINGs & AMBIGUITY SHALL BE IMMEDIATELY BROUGHT TO THE NOTICE OF THE ARCHITECTS BEFORE ITS EXECUTION.

THIS DRAWIING SHOULD NOT BE SCALED & ONLY WIRITTEN DIMENSIONS TO BE FOLLOWIED.

ALL DIMENSIONS ARE IN METER UNLESS OTHERWIISE SPECIFIED.

NO.	REVISIONS

ARCHITECT
RAJEEV VISHW1ASRAO
ARCHITECTS & PLANNERS
'SANSKRUTI' 3RD FLOOR, PLOT NO. 2, SADASHIV PETH, PUNE - 411 030. TEL. NO. - 020 24530008, 24532008

TITLE : SECOND FLOOR FURNITURE DETAILS

PROJECT : **TEACHER'S LEARNING CENTRE AT IUCAA CAMPUS**

CLIENT :THE DIRECTOR ,IUCAA

SCALE : NTS | DATE : 31.08.18 | DESIGN : KAVITA

DRG. NO.
IU/TLC/N/310

DATE : 09.12.19

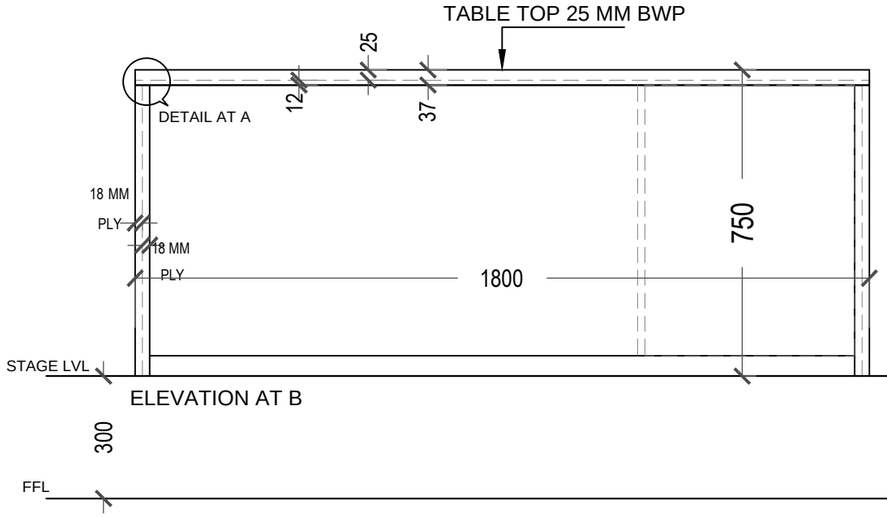

ELEVATION AT B

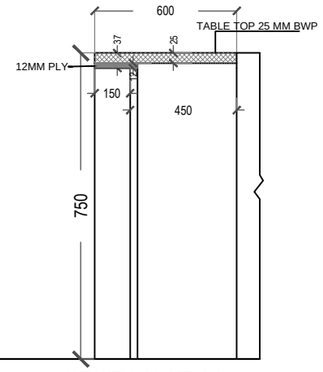

SECTION AT AA

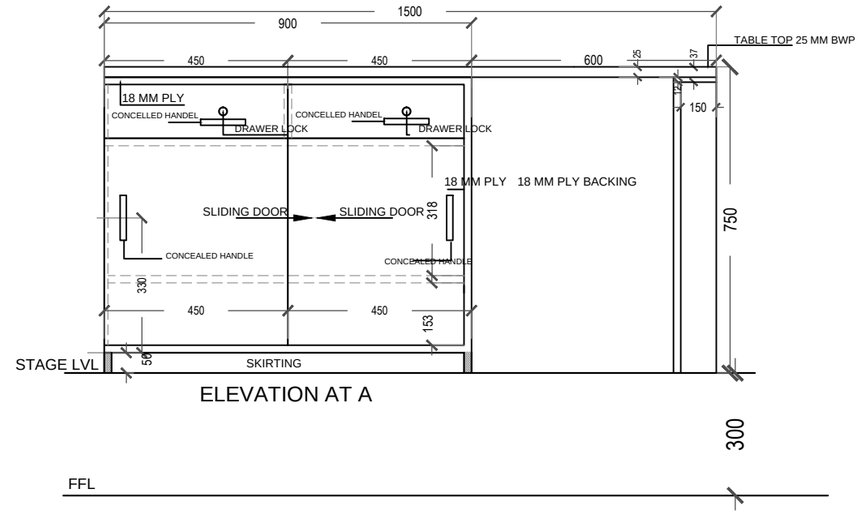

ELEVATION AT A

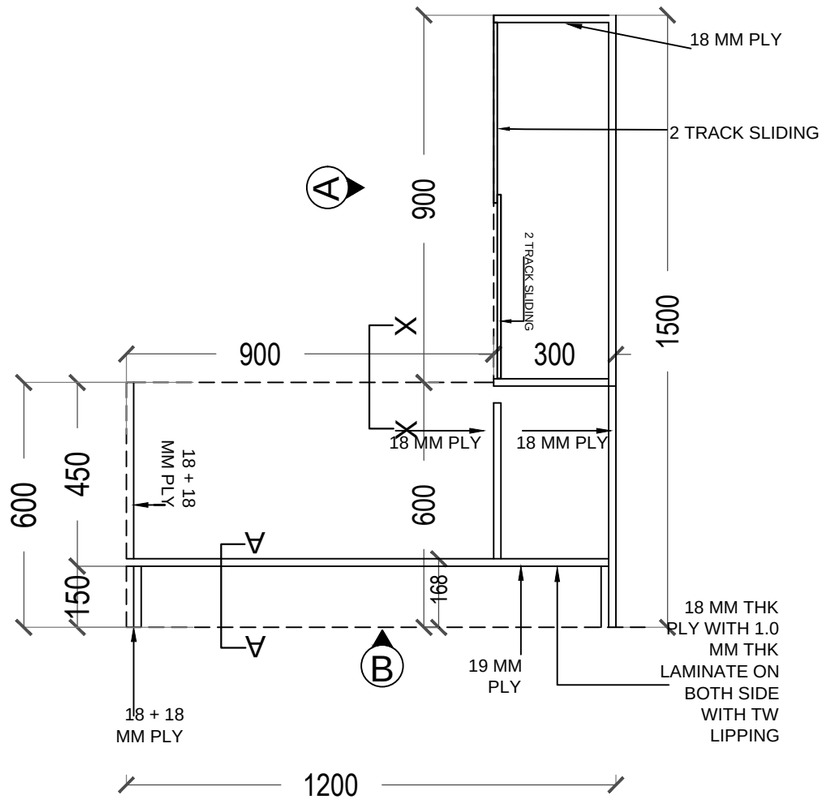

PLAN BELOW TABLE TOP

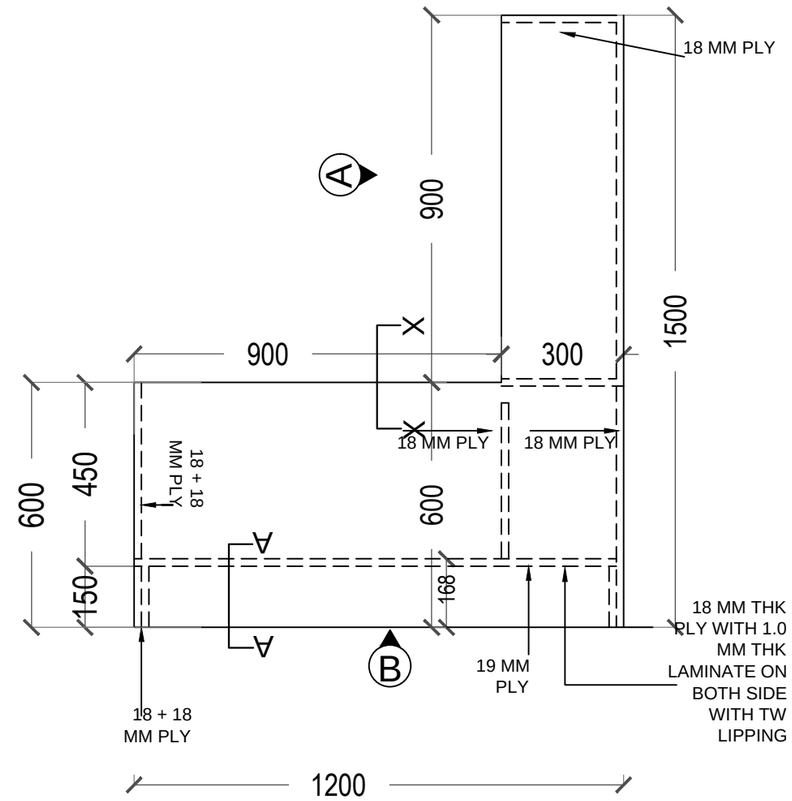

PLAN ABOVE TABLE TOP

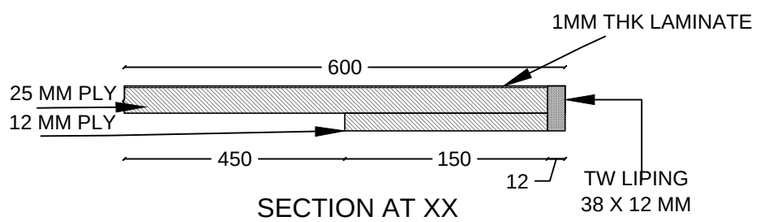

SECTION AT XX

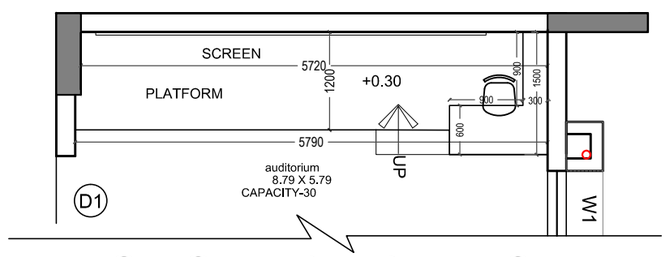

STAGE TABLE DETAILS

TABLE TYPE 'C'

DRG. NO. IU/TLC/IN/125

DATE : 17.1.2020

TITLE : STAGE TABLE DETAILS

PROJECT : TEACHER'S LEARNING CENTRE AT IUCAA CAMPUS

CLIENT :THE DIRECTOR ,IUCAA

SCALE : NTS | DATE : 31.08.18 | DESIGN : KAVITA

ARCHITECT

RAJEEV VISHWI ASRAO

ARCHITECTS & PLANNERS

'SANSKRUTI' 3RD FLOOR, PLOT NO. 2, SADASHIV PETH, PUNE - 411 030. TEL. NO. - 020 24530008, 24532008

NO. REVISIONS

ALL DIMENSIONS SHALL BE CHECKED & CO-RELATED WITH STRUCTURAL / WORKING DRAWINGS & AMBIGUITY SHALL BE IMMEDIATELY BROUGHT TO THE NOTICE OF THE ARCHITECTS BEFORE ITS EXECUTION. NO DIMENSIONS SHALL BE SCALED & ONLY WRITTEN DIMENSIONS TO BE FOLLOWED. ALL DIMENSIONS ARE IN METER UNLESS OTHERWISE SPECIFIED.

THIS DRAWING IS THE PROPERTY OF M/S RAJEEV VISHWAS RAO ARCHITECTS (PUNE) & NOT TO BE COPIED OR USED WITHOUT THEIR WRITTEN PERMISSION.

C:\Users\PC\Desktop\TLC\IUCAA - TLC - STAGE\RECORDING TABLE DETAILS- 20.1.2020.dwg

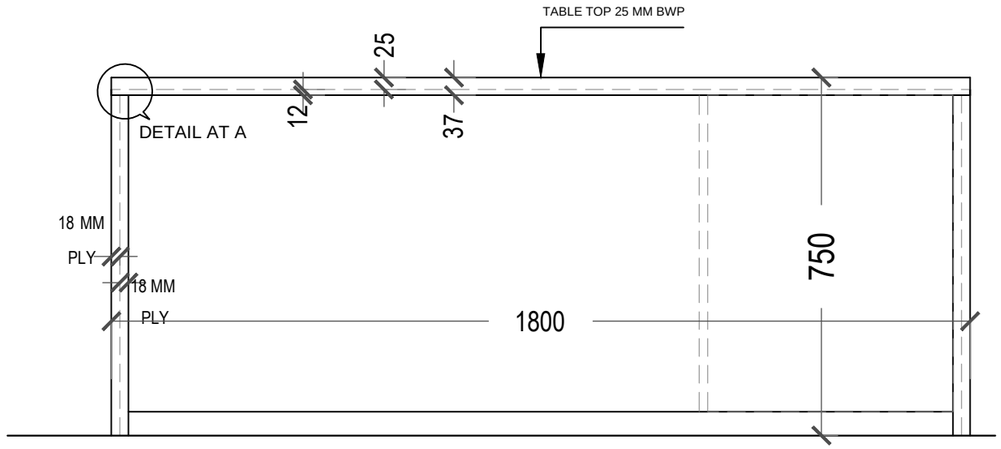

ELEVATION AT B

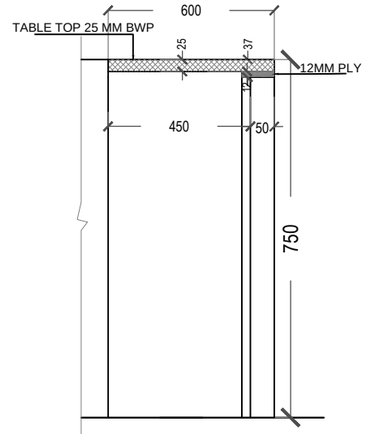

SECTION AT AA

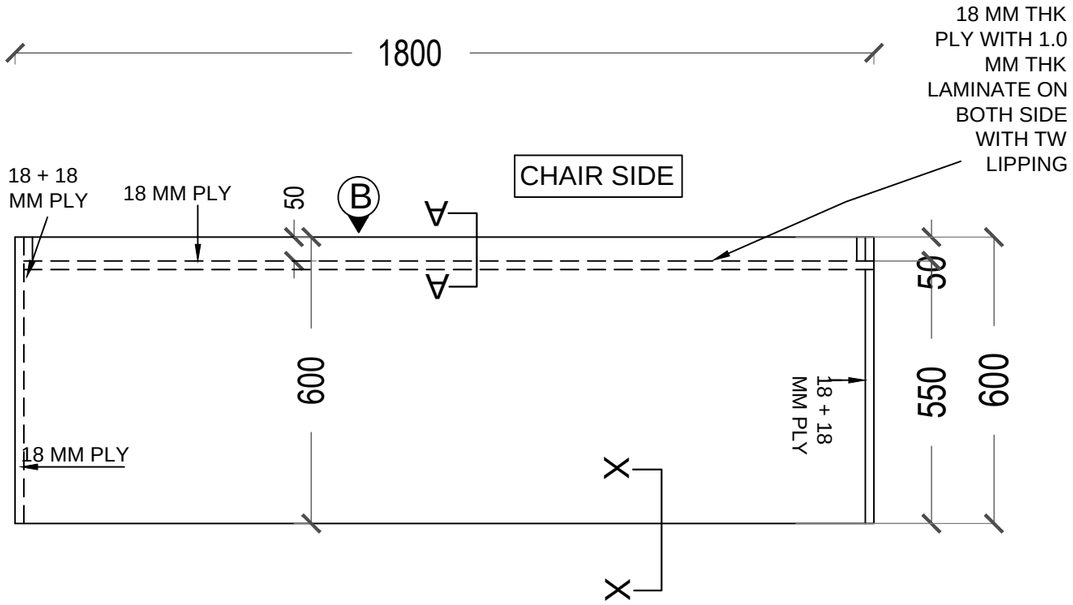

PLAN ABOVE TABLE TOP

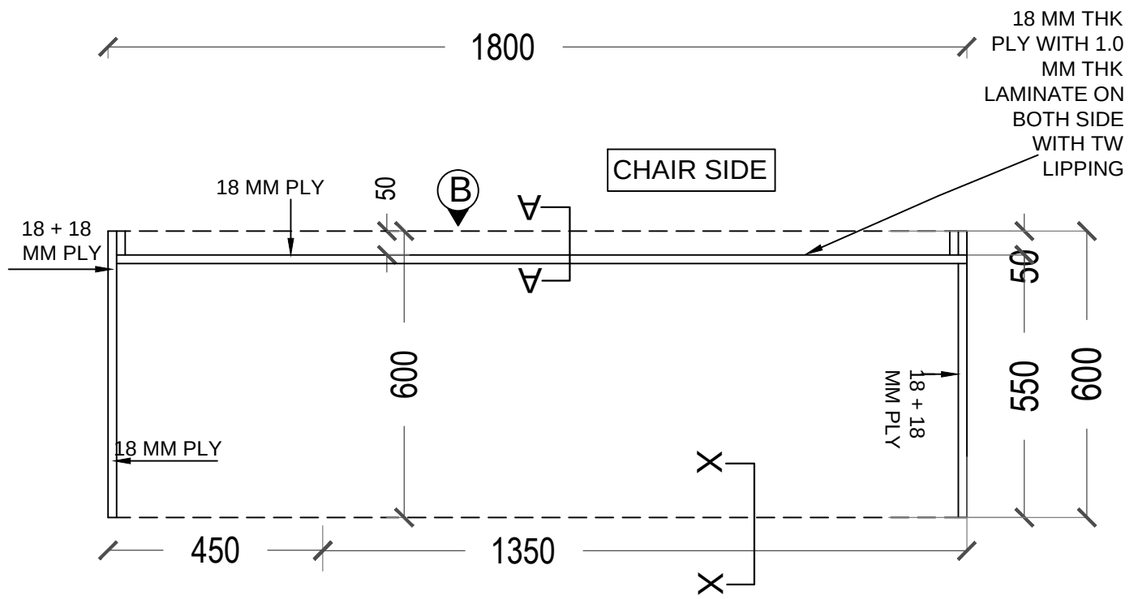

PLAN BELOW TABLE TOP

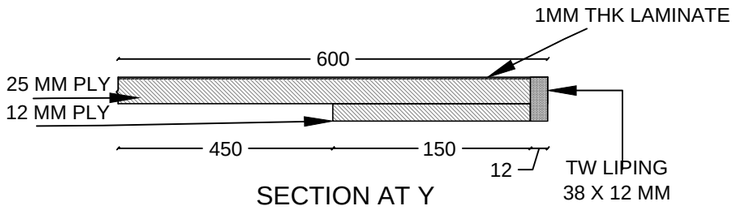

SECTION AT Y

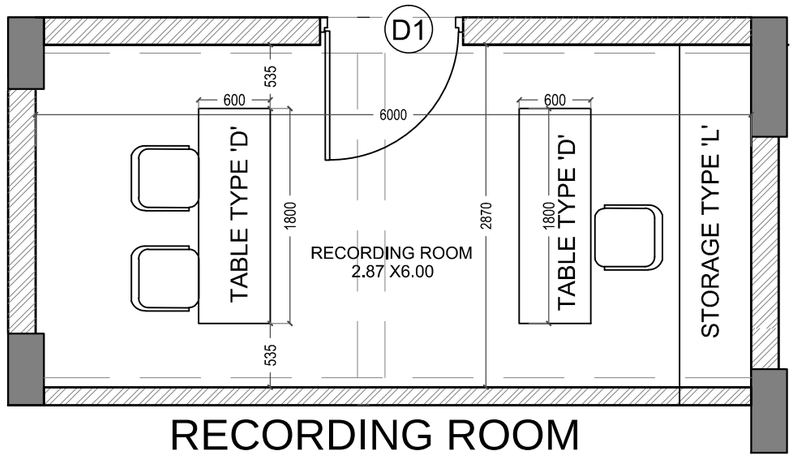

RECORDING ROOM
TABLE TYPE 'D'

DRG. NO. IU/TLC/IN/240

DATE : 20.1.2020

TITLE : RECORDING ROOM TABLE DETAILS

PROJECT : TEACHER'S LEARNING CENTRE AT IUCAA CAMPUS

CLIENT : THE DIRECTOR , IUCAA

SCALE : NTS | DATE : 31.08.18 | DESIGN : KAVITA

ARCHITECT
RAJEEV VISHWAS ASRAO
ARCHITECTS & PLANNERS
"SANSKRUTI" 3RD FLOOR, PLOT NO. 2, SADASHIV PETH,
PUNE - 411 030. TEL NO. - 020 24530008, 24532008

NO	REVISIONS

ALL DIMENSIONS SHALL BE CHECKED & CO-RELATED WITH STRUCTURAL / WORKING DRAWINGS & AMBIGUITY SHALL BE IMMEDIATELY BROUGHT TO THE NOTICE OF THE ARCHITECTS BEFORE ITS EXECUTION.
THE DRAWINGS SHOULD NOT BE SCALED & ONLY WRITTEN DIMENSIONS TO BE FOLLOWED.
ALL DIMENSIONS ARE IN METER UNLESS OTHERWISE SPECIFIED.

THIS DRAWING IS THE PROPERTY OF M/S RAJEEV VISHWAS ASRAO ARCHITECTS (PUNE) & NOT TO BE COPIED OR USED WITHOUT PROPER WRITTEN CONSENT.

C:\Users\PC\Dropbox\TLC\IUCAA_TLC - STAGE\RECORDING TABLE DETAILS 20.1.2020.dwg

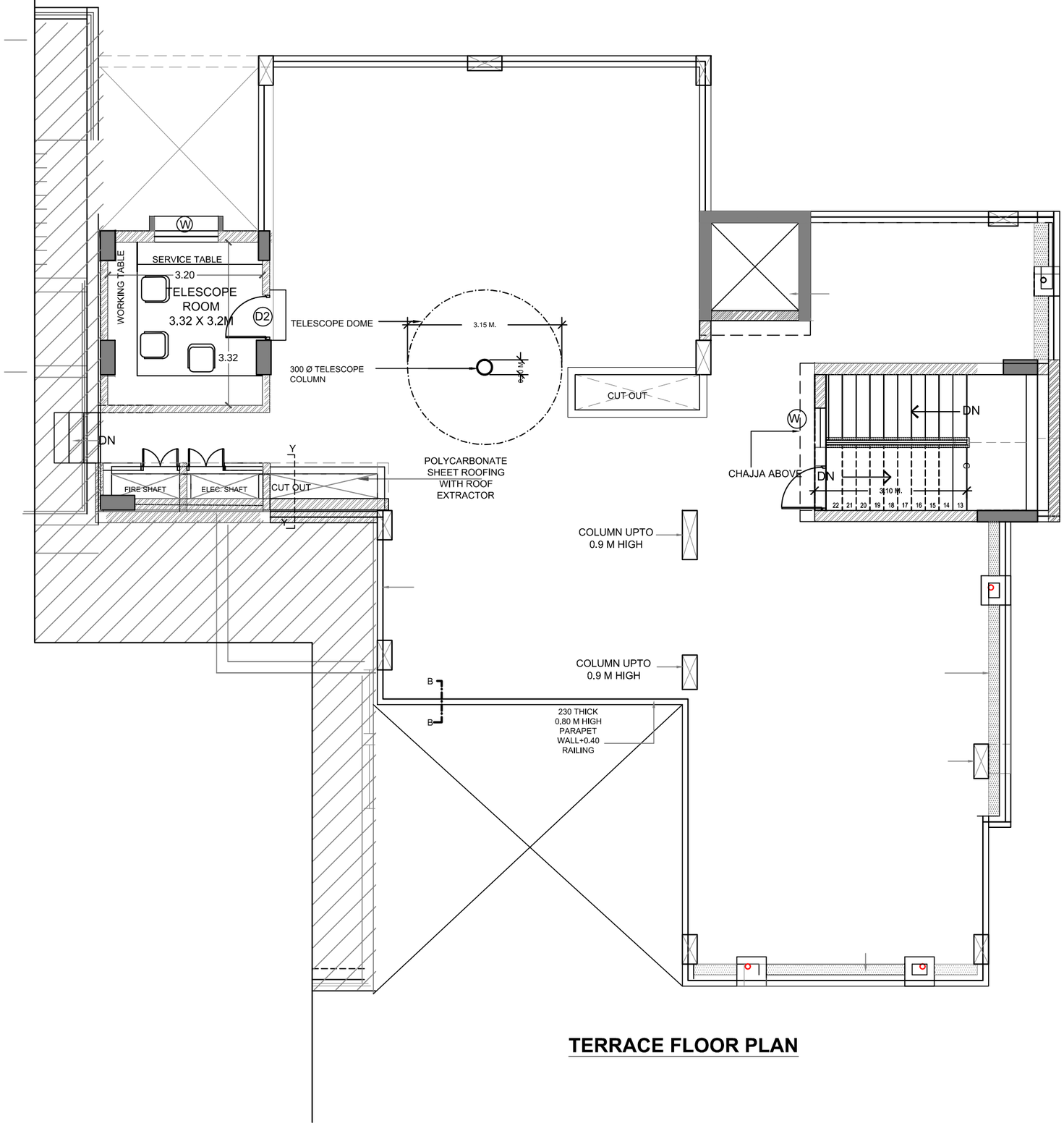

TERRACE FLOOR PLAN

TERRACE FLOOR FURNITURE LAYOUT

DRG. NO.
IU/TLC/IN/400
DATE : 17.1.2020

TITLE : TERRACE FLOOR-FURNITURE LAYOUT
PROJECT : TEACHER'S LEARNING CENTRE AT IUCAA CAMPUS
CLIENT : THE DIRECTOR, IUCAA
SCALE : NTS | DATE : 31.08.18 | DESIGN : KAVITA

ARCHITECT
RAJEEV VISHWASRAO
ARCHITECTS & PLANNERS
'SANSKRUTI' 3RD FLOOR, PLOT NO. 2, SADASHIV PETH, PUNE - 411 030. TEL. NO. - 020 24530088, 24532608

NO. REVISIONS

ALL DIMENSIONS SHALL BE CHECKED & CO-RELATED WITH STRUCTURAL / WORKING DRAWINGs & AMBIGUITY SHALL BE IMMEDIATELY BROUGHT TO THE NOTICE OF THE ARCHITECTS BEFORE ITS EXECUTION.
THIS DRAWING SHOULD NOT BE SCALED & ONLY WRITTEN DIMENSIONS TO BE FOLLOWED.
ALL DIMENSIONS ARE IN METER UNLESS OTHERWISE SPECIFIED.

THIS DRAWING IS THE PROPERTY OF M/S RAJEEV VISHWVASRAO ARCHITECTS,(PUNE) & NOT TO BE COPIED OR USED WITHOUT PROPER WRITTEN PERMISSION.

D:\Users\PC0\Desktop\TLC\IUCAA - TLC - FLOOR PLANS- 20120204.dwg

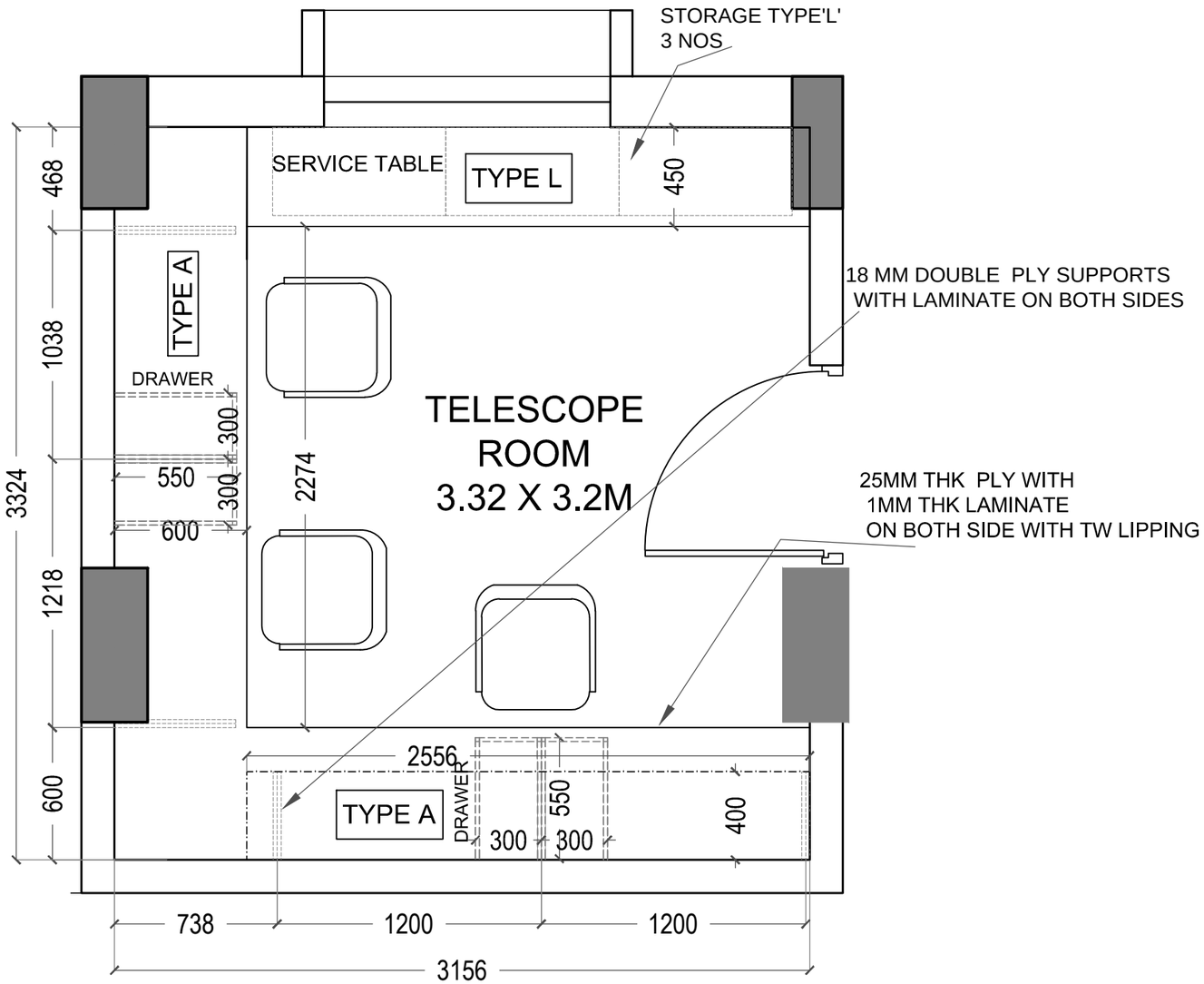

PARTITION

TYPE	HEIGHT
P	2200 MM
Q	1500 MM
R	1500 MM
S	2955 MM
T	3390 MM
U	3390 MM

TYPE	FURNITURE TYPE	SIZE
A	TABLE	1200 X 600 MM
A	TABLE	1500 X 600 MM
A	TABLE	1800 X 600 MM
F	STORAGE CABINET	3435 X 600 MM
L	LAB TABLE	IUCAA

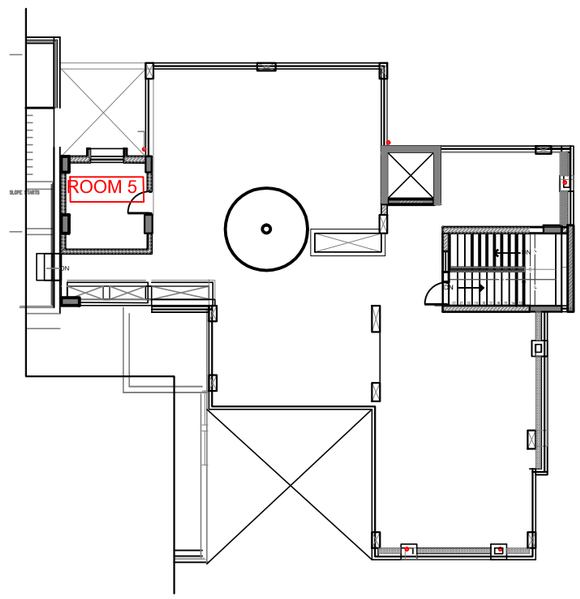

TERRACE FLOOR KEY PLAN

THIS DRAWIING IS THE PROPERTY OF
M/S RAJEEV VISHW1ASRAO ARCHITECTS.(PUNE)
& NOT TO BE COPIED OR USED WIITHOUT
THEIR WIRITTEN PERMISSION.

C:\Users\PC6\Desktop\TLC\IUCAA - TLC - ROOM DETAIL LAYOUTS- 20.1.2020.dwg

ALL DIMENSIONS SHALL BE CHECKED & CO-RELATED WIITH STRUCTURAL / WIORKING DRAWIINGs & AMBIGUITY SHALL BE IMMEDIATELY BROUGHT TO THE NOTICE OF THE ARCHITECTS BEFORE ITS EXECUTION.

THIS DRAWIING SHOULD NOT BE SCALED & ONLY WIRITTEN DIMENSIONS TO BE FOLLOWIED.

ALL DIMENSIONS ARE IN METER UNLESS OTHERWIISE SPECIFIED.

NO.	REVISIONS

ARCHITECT
RAJEEV VISHW1ASRAO
ARCHITECTS & PLANNERS
'SANSKRUTI' 3RD FLOOR, PLOT NO. 2, SADASHIV PETH, PUNE - 411 030. TEL. NO. - 020 24530008, 24532008

TITLE : TERRACE FLOOR FURNITURE DETAILS

PROJECT : **TEACHER'S LEARNING CENTRE AT IUCAA CAMPUS**

CLIENT :THE DIRECTOR ,IUCAA

SCALE : NTS | DATE : 31.08.18 | DESIGN : KAVITA

DRG. NO.
IU/TLC/N/410

DATE :
09.12.19

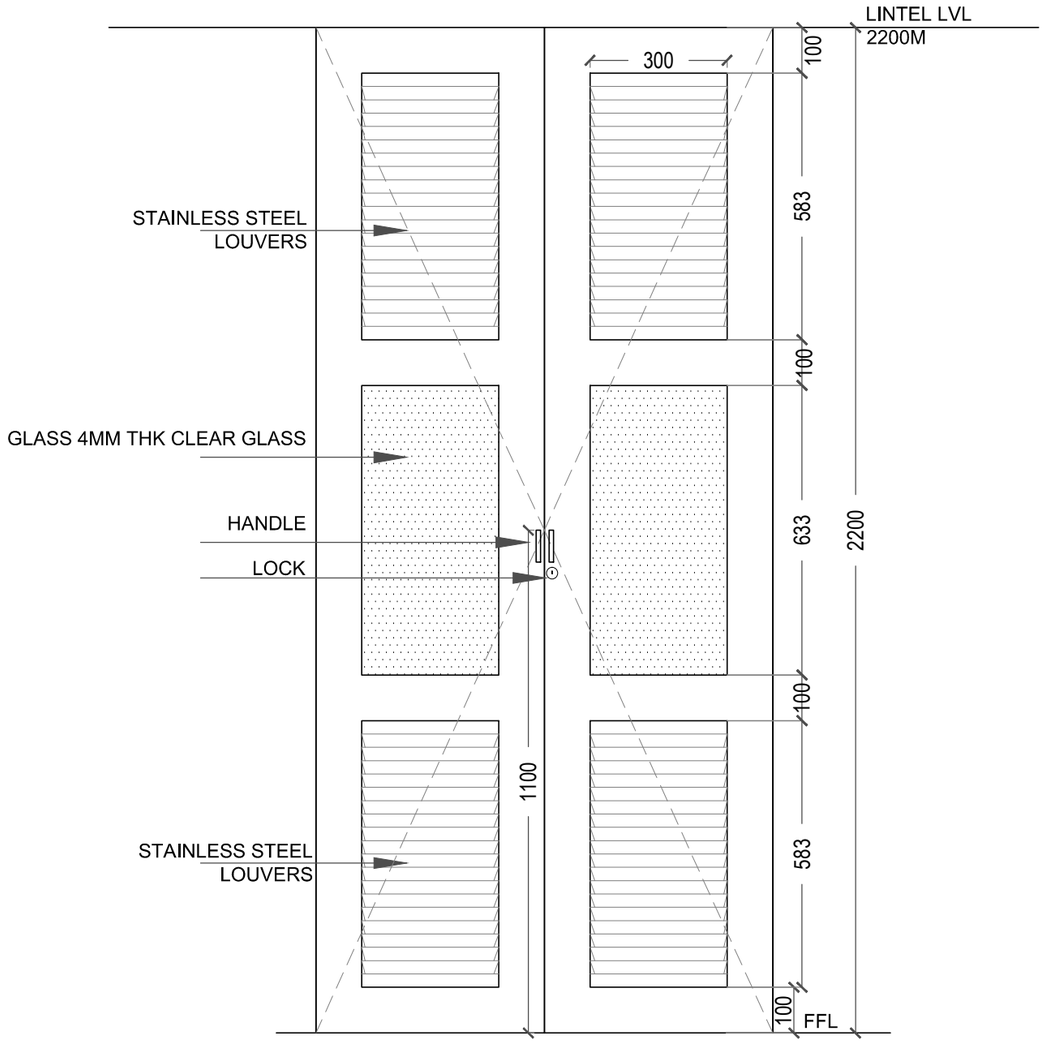

ELEVATION

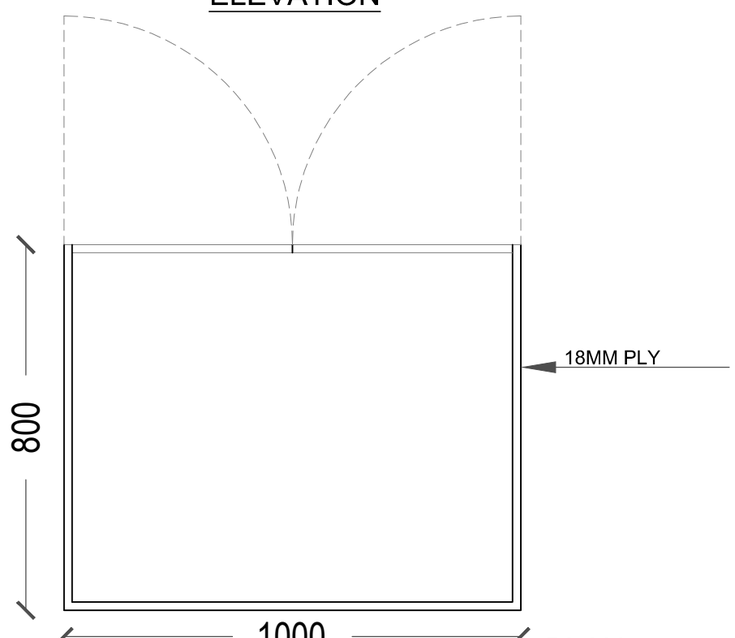

PLAN

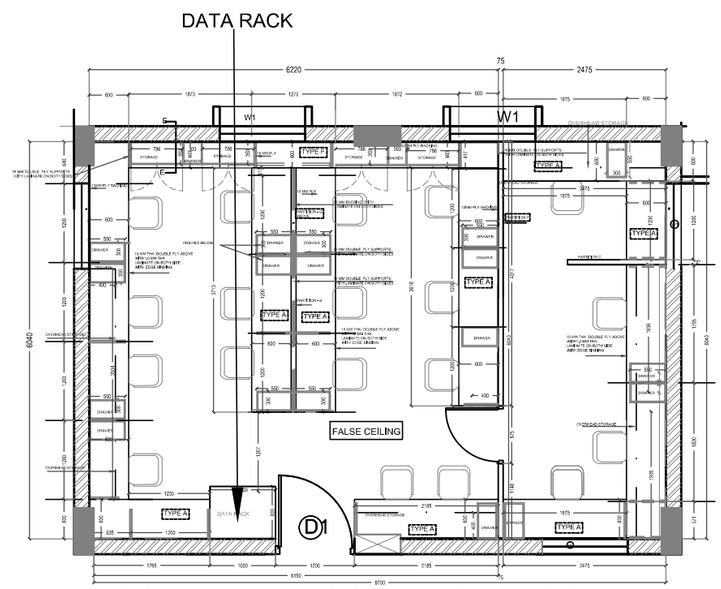

COMPUTER ROOM-FIRST FLOOR

DATA RACK DETAIL

DRG. NO.	IU/TLC/IN/224
DATE :	13.1.2020

TITLE : DATA RACK DETAILS

PROJECT : **TEACHER'S LEARNING CENTRE AT IUCAA CAMPUS**

CLIENT : THE DIRECTOR ,IUCAA

SCALE : NTS | DATE : 31.08.18 | DESIGN : KAVITA

ARCHITECT

RAJEEV VISHWI ASRAO

ARCHITECTS & PLANNERS

'SANSKRUTI' 3RD FLOOR, PLOT NO. 2, SADASHIV PETH, PUNE - 411 030. TEL NO. - 020 24530008, 24532008

NO | REVISIONS

ALL DIMENSIONS SHALL BE CHECKED & CO-RELATED WITH STRUCTURAL / WORKING DRAWINGs & AMBIGUITY SHALL BE IMMEDIATELY BROUGHT TO THE NOTICE OF THE ARCHITECTS BEFORE ITS EXECUTION.
THE DRAWINGS SHOULD NOT BE SCALED & ONLY WRITTEN DIMENSIONS TO BE FOLLOWED.
ALL DIMENSIONS ARE IN METER UNLESS OTHERWISE SPECIFIED.

THIS DRAWING IS THE PROPERTY OF
M/S RAJEEV VISHWI ASRAO ARCHITECTS (PUNE)
& NOT TO BE COPIED OR USED WITHOUT PRIOR WRITTEN PERMISSION.

C:\Users\PC\Dropbox\IUTLC\IUCAA - TLC - SINK RACK_DATA RACK_20.1.2020_.dwg

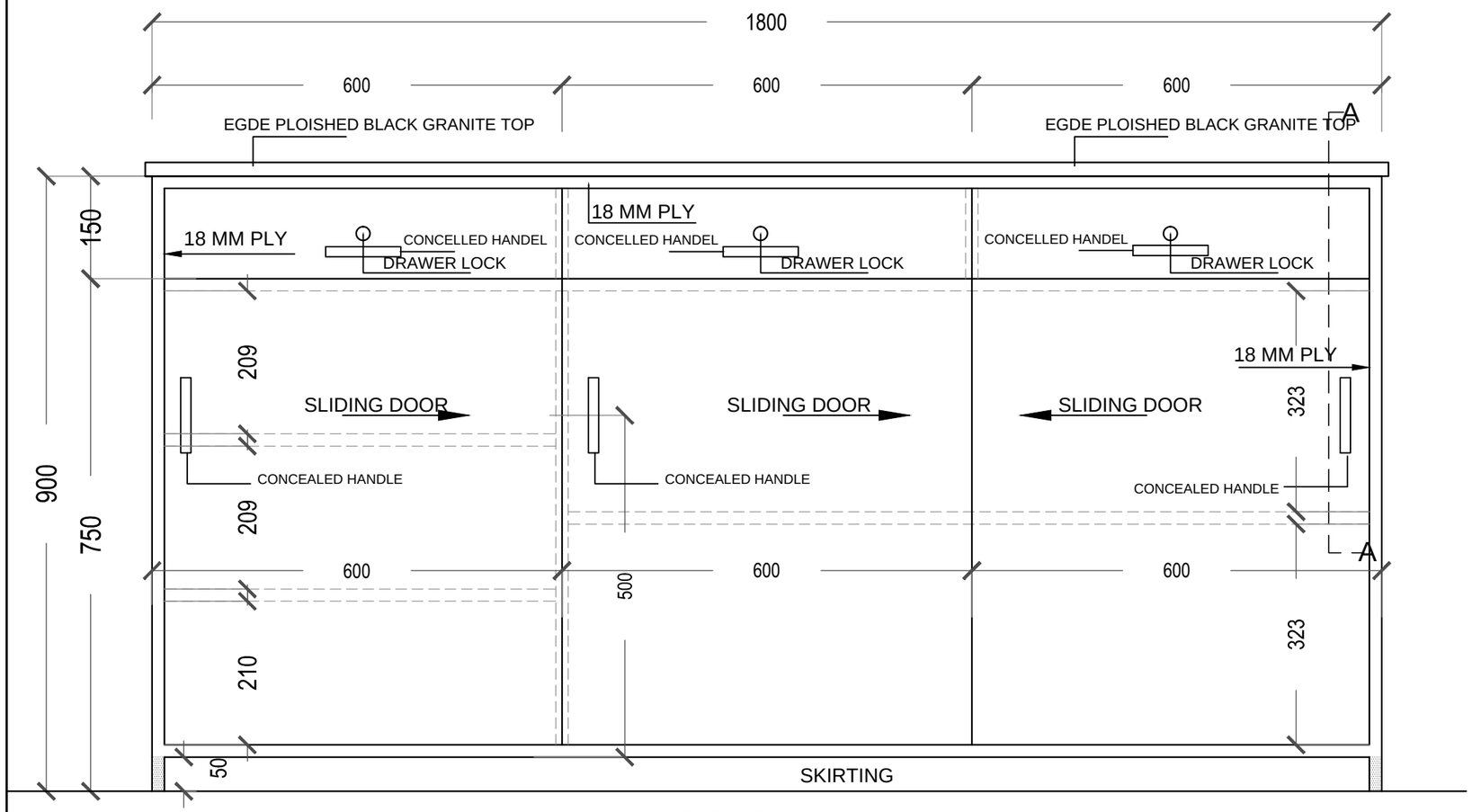

ELEVATION

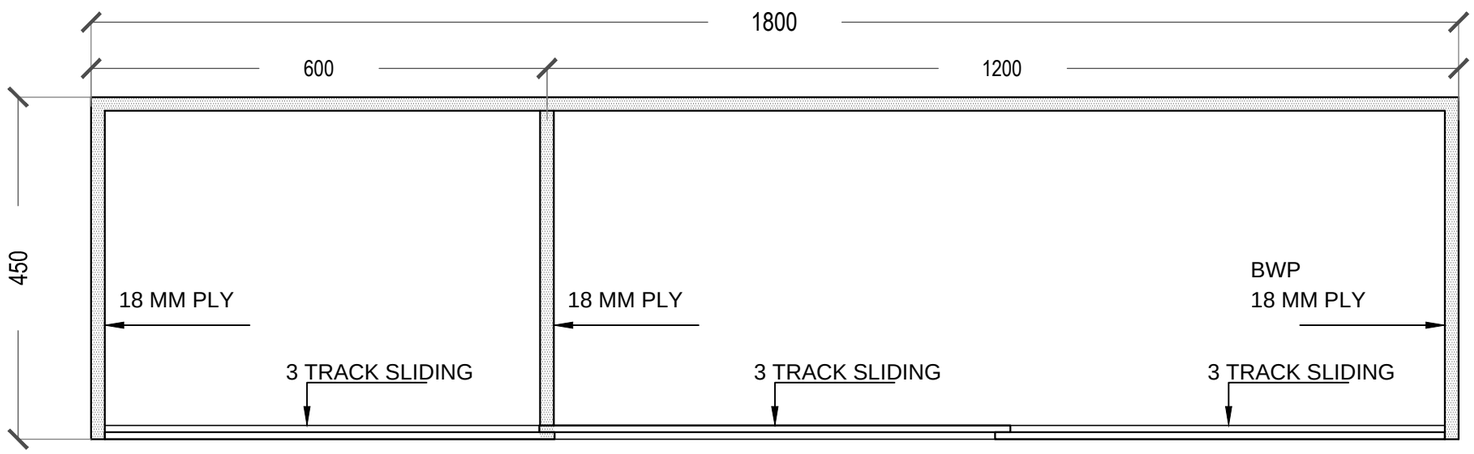

PLAN - COFFEE AND TEA COUNTER TABLE

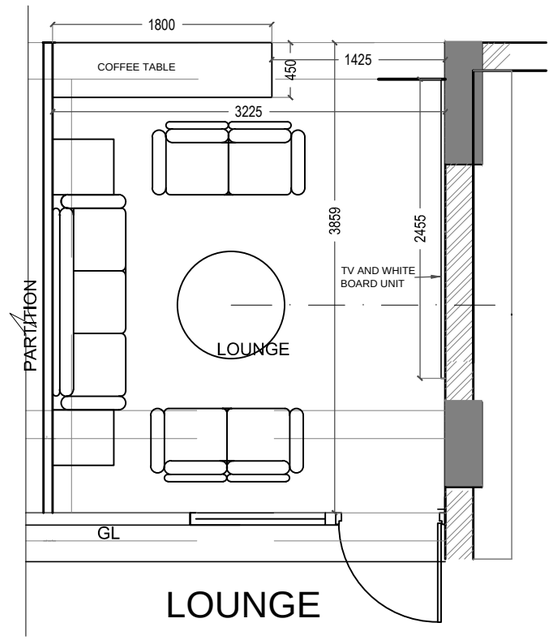

LOUNGE

SECOND FLOOR -COFFEE TABLE DETAILS

DRG. NO.
IU/TLC/IN/321
DATE : 17.12.19

TITLE : COFFEE TABLE DETAILS AT LONGE
PROJECT : TEACHER'S LEARNING CENTRE AT IUCAA CAMPUS
CLIENT :THE DIRECTOR ,IUCAA
SCALE : NTS | DATE : 31.08.18 | DESIGN : KAVITA

ARCHITECT
RAJEEV VISHWI ASRAO
ARCHITECTS & PLANNERS
'SANSKRUTI' 3RD FLOOR, PLOT NO. 2, SADASHIV PETH,
PUNE - 411 030 TEL NO. - 020 24530008, 24532008

NO. REVISIONS

ALL DIMENSIONS SHALL BE CHECKED & CO-RELATED WITH STRUCTURAL / WORKING DRAWINGs & AMBIGUITY SHALL BE IMMEDIATELY BROUGHT TO THE NOTICE OF THE ARCHITECTS BEFORE ITS EXECUTION.
THIS DRAWING SHOULD NOT BE SCALED & ONLY WRITTEN DIMENSIONS TO BE FOLLOWED.
ALL DIMENSIONS ARE IN METER UNLESS OTHERWISE SPECIFIED.

THIS DRAWING IS THE PROPERTY OF M/S RAJEEV VISHWI ASRAO ARCHITECTS (PUNE) & NOT TO BE COPIED OR USED WITHOUT THEIR WRITTEN PERMISSION.

C:\Users\PC\Desktop\TLC\IUCAA - TLC - COFFEE TABLE DETAILS-20.1.2020.dwg

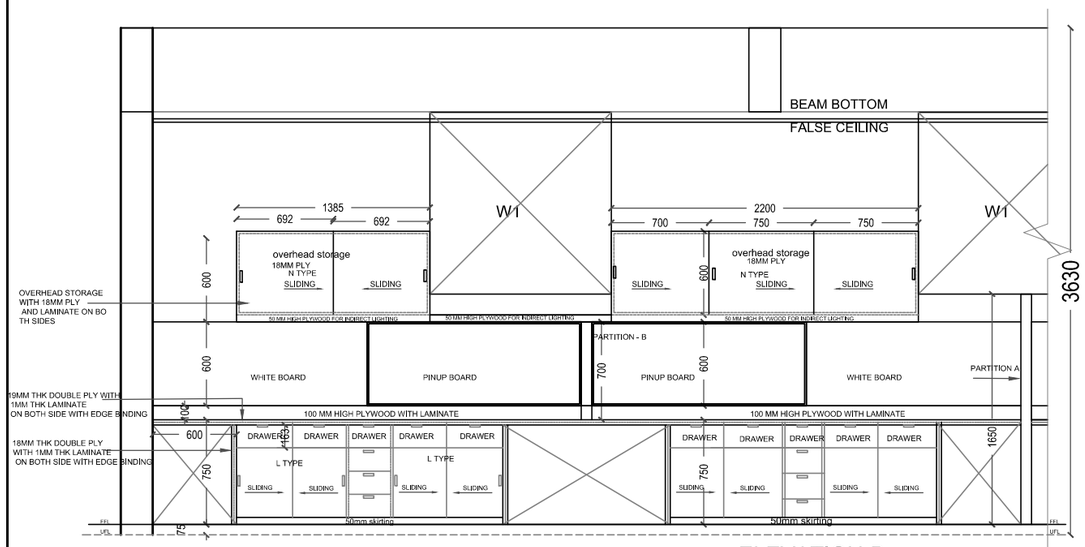

ELEVATION-B

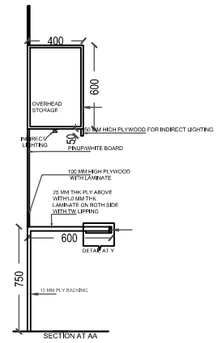

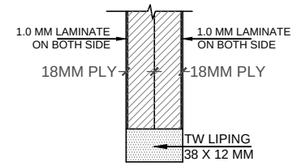

SECTION - XX

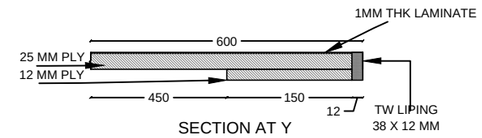

SECTION AT Y

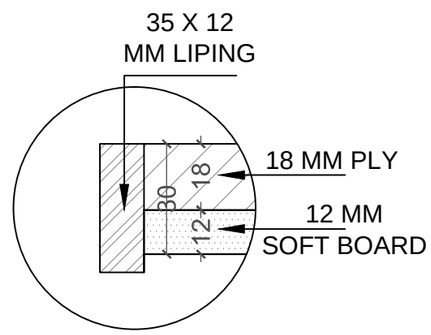

DETAIL AT Y

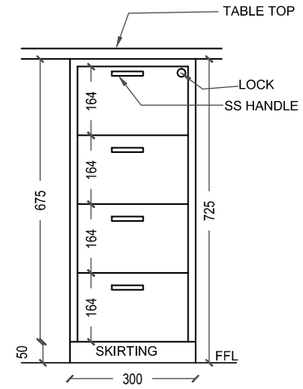

DRAWER UNIT DETAIL

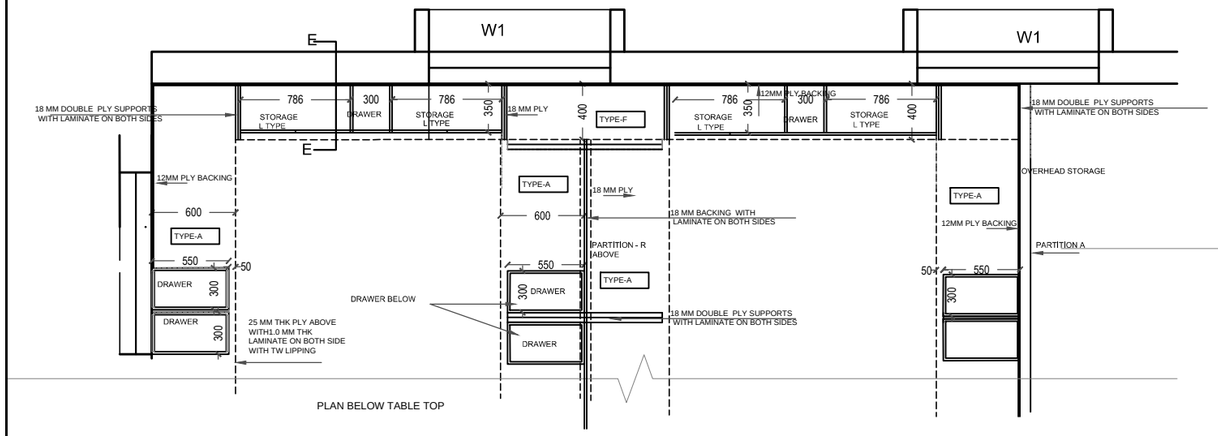

PLAN BELOW TABLE TOP

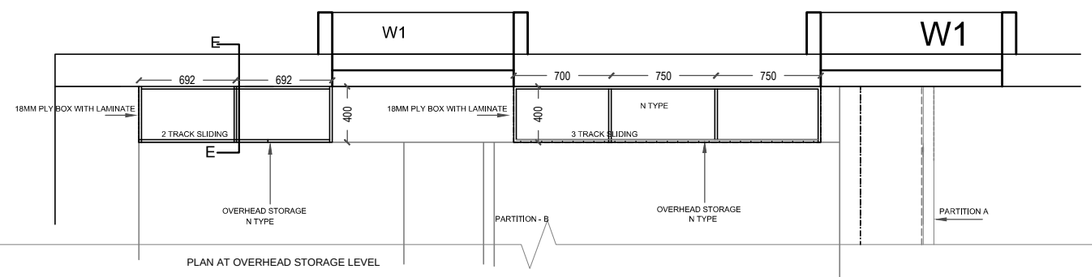

PLAN AT OVERHEAD STORAGE LEVEL

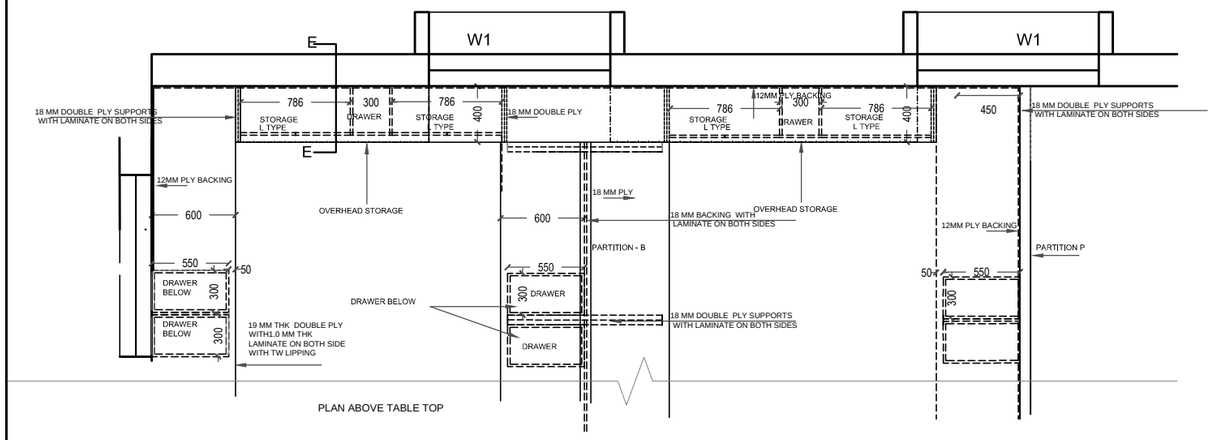

PLAN ABOVE TABLE TOP

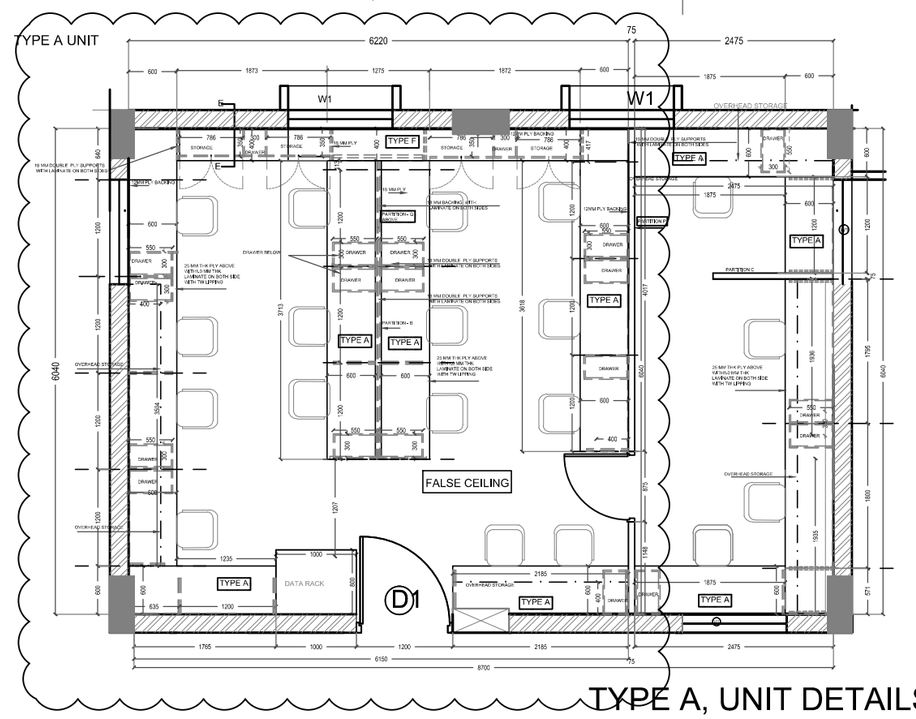

COMPUTER CENTER-1ST FLOOR

TYPE A, UNIT DETAILS
STORAGE TYPE 'L'
DRAWER UNIT,STORAGE TYPE 'N'

DRG. NO. IU/TLC/IN/223

DATE : 17.12.19

TITLE : TABLE TYPE A DETAILS

PROJECT : TEACHER'S LEARNING CENTRE AT IUCAA CAMPUS

CLIENT :THE DIRECTOR ,IUCAA

SCALE : NTS | DATE : 31.08.18 | DESIGN : KAVITA

ARCHITECT
RAJEEV VISHWJ ASRAO
ARCHITECTS & PLANNERS
'SANSKRUTI' 3RD FLOOR, PLOT NO. 3, SADASHIV PETH, PUNE - 411 030. TEL NO. - 020 24530008, 24532008

NO. REVISIONS

ALL DIMENSIONS SHALL BE CHECKED & CO-RELATED WITH STRUCTURAL / WORKING DRAWINGS & AMBIGUITY SHALL BE IMMEDIATELY BROUGHT TO THE NOTICE OF THE ARCHITECTS BEFORE ITS EXECUTION.
THE DRAWINGS SHOULD NOT BE SCALED & ONLY WRITTEN DIMENSIONS TO BE FOLLOWED.
ALL DIMENSIONS ARE IN METER UNLESS OTHERWISE SPECIFIED.

THIS DRAWING IS THE PROPERTY OF M/S RAJEEV VISHWJ ASRAO ARCHITECTS (PUNE) & NOT TO BE COPIED OR USED WITHOUT THEIR WRITTEN PERMISSION.

C:\Users\PC\Desktop\TLC\IUCAA - TLC - FURNITURE DETAILS TABLES - 20.1.2020_.dwg

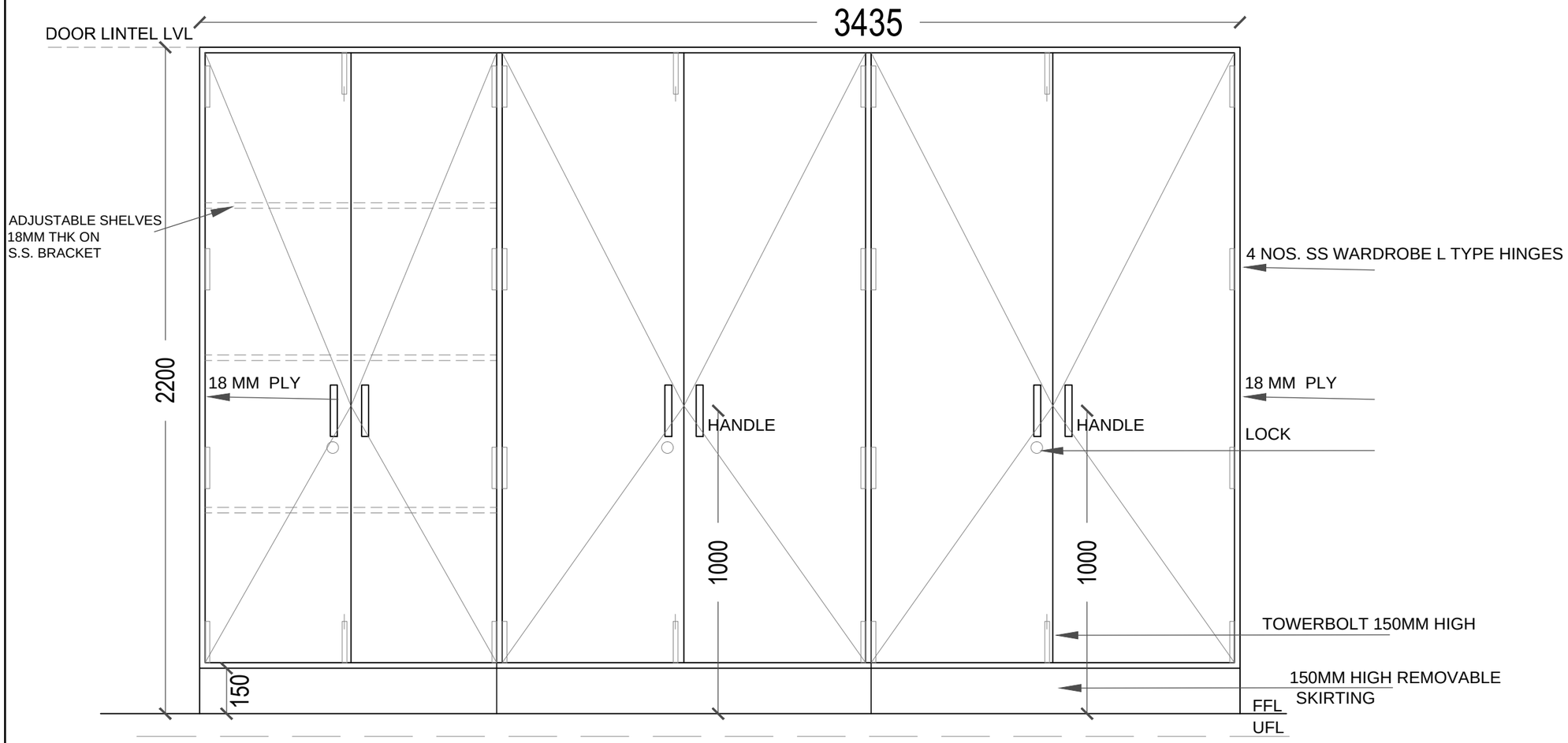

FRONT ELEVATION

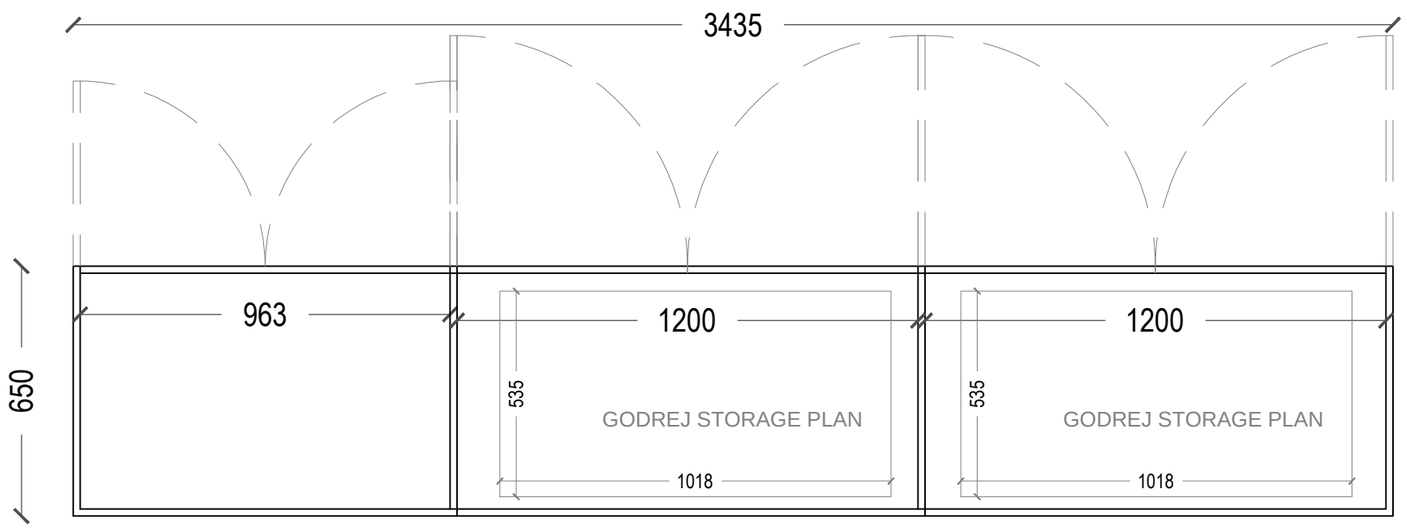

PLAN OF STORAGE

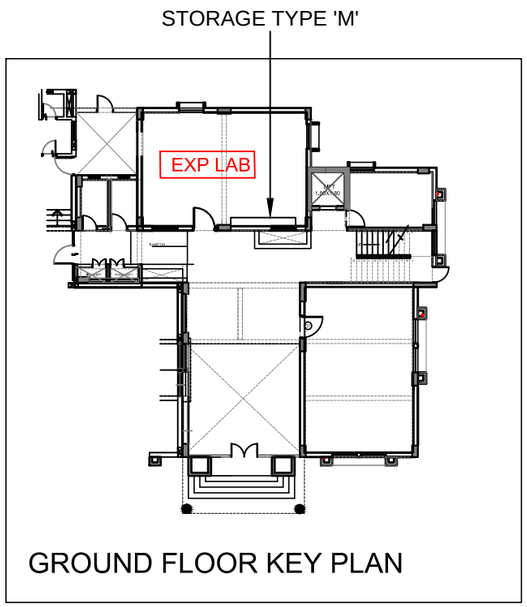

GROUND FLOOR KEY PLAN

STORAGE TYPE 'M'

DRG. NO.
IU/TLC/IN/112
DATE : 3.1.2020

TITLE : STORAGE UPTO LINTEL LVL-TYPE 'M'
PROJECT : TEACHER'S LEARNING CENTRE AT IUCAA CAMPUS
CLIENT : THE DIRECTOR ,IUCAA
SCALE : NTS | DATE : 31.08.18 | DESIGN : KAVITA

ARCHITECT
RAJEEV VISHWI ASRAO
ARCHITECTS & PLANNERS
"SANSKRUTI" 3RD FLOOR, PLOT NO. 2, SADASHIV PETH,
PUNE - 411 030. TEL NO. - 020 24530008, 24532008

NO	REVISIONS

ALL DIMENSIONS SHALL BE CHECKED & CO-RELATED WITH STRUCTURAL / WORKING DRAWINGs & AMBIGUITY SHALL BE IMMEDIATELY BROUGHT TO THE NOTICE OF THE ARCHITECTS BEFORE ITS EXECUTION.
THIS DRAWING SHOULD NOT BE SCALED & ONLY WRITTEN DIMENSIONS TO BE FOLLOWED.
ALL DIMENSIONS ARE IN METER UNLESS OTHERWISE SPECIFIED.

THIS DRAWING IS THE PROPERTY OF
M/S RAJEEV VISHWI ASRAO ARCHITECTS (PUNE)
& NOT TO BE COPIED OR USED WITHOUT
THEIR WRITTEN PERMISSION.

C:\Users\PC\Desktop\TLC\IUCAA_TLC - EXP LAB
STORAGE-TYPE M - 20.1.2020_.dwg

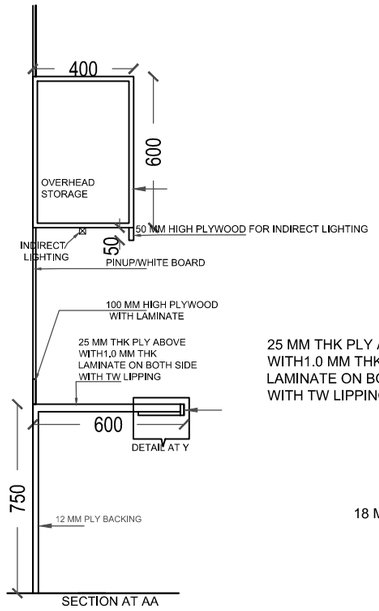

SECTION AT AA

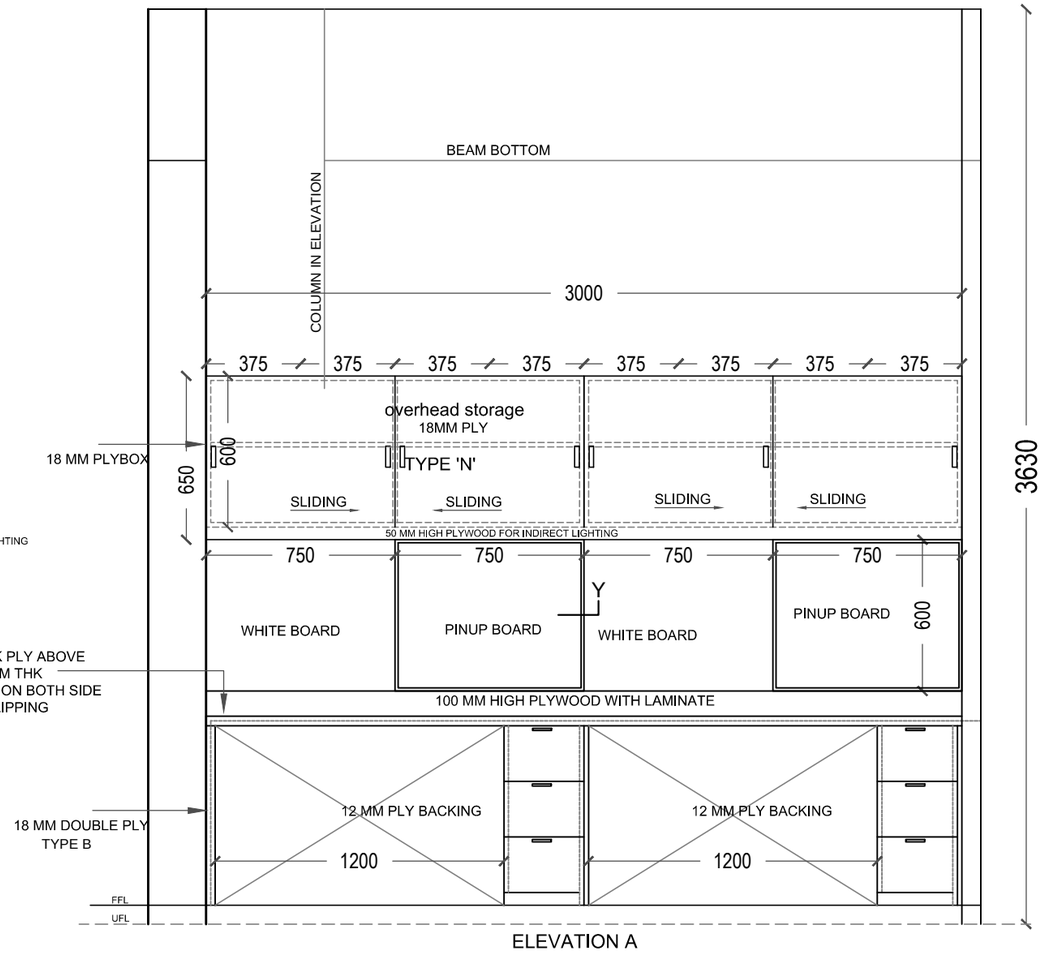

ELEVATION A

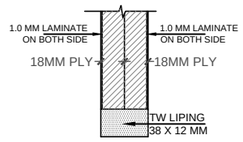

SECTION - XX

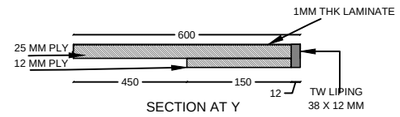

SECTION AT Y

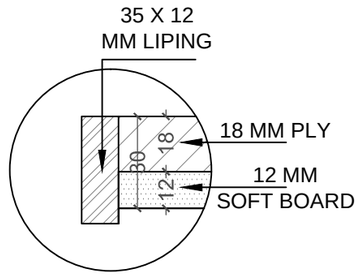

DETAIL AT Y

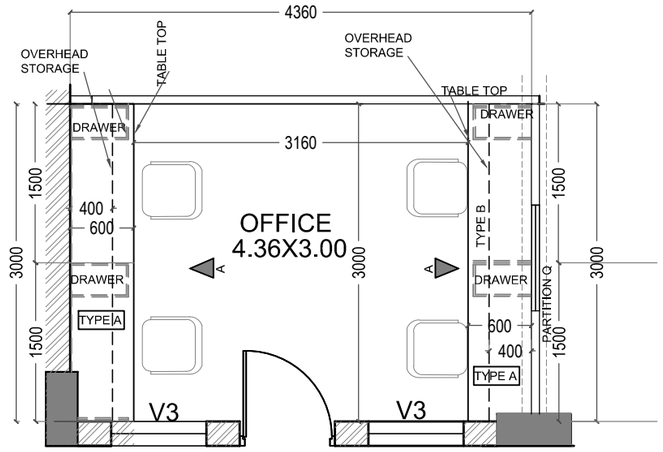

KEY PLAN-OFFICE TABLE
2ND FLOOR

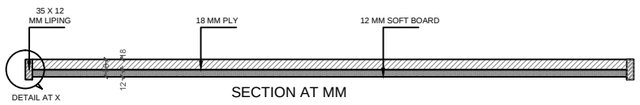

SECTION AT MM

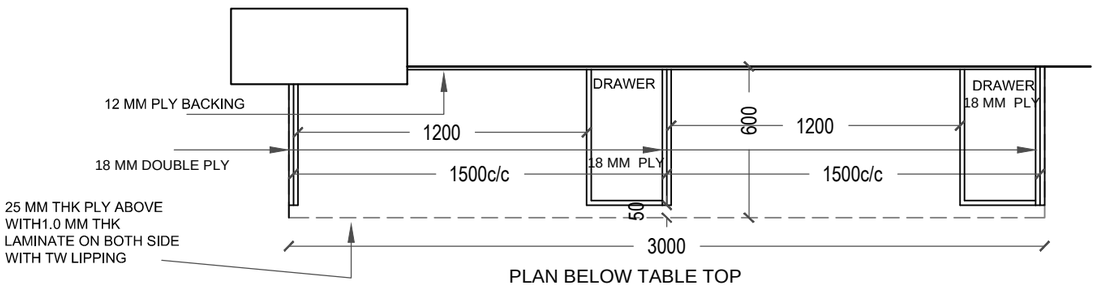

PLAN BELOW TABLE TOP

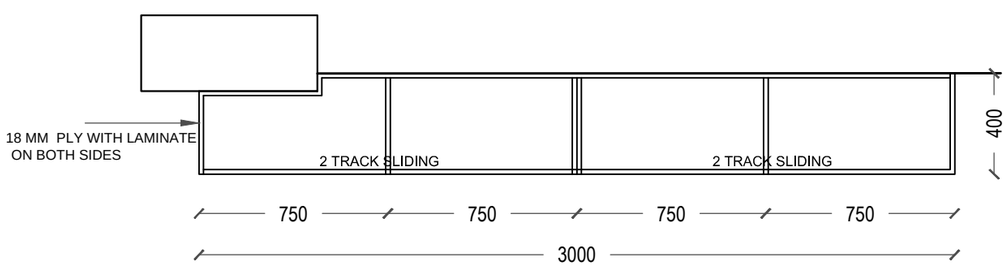

PLAN OF OVERHEAD STORAGE

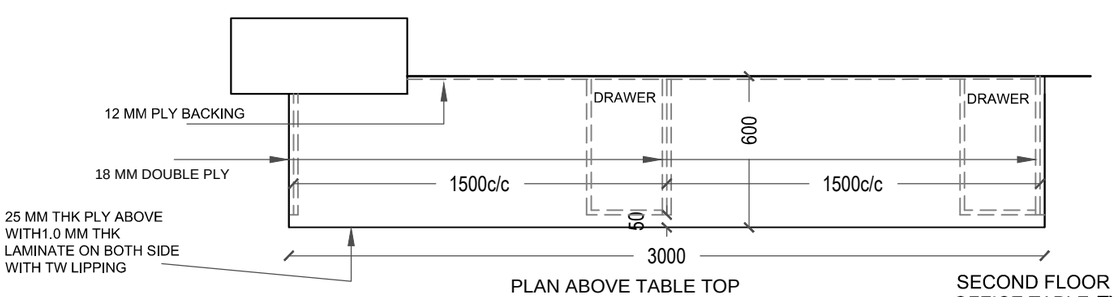

PLAN ABOVE TABLE TOP

SECOND FLOOR
OFFICE TABLE-TYPE A
STORAGE TYPE 'N'
SOFT BOARD

DRG. NO.	DATE :
IU/TLC/IN/331	17.12.19

TITLE : TABLE TYPE B DETAILS

PROJECT : **TEACHER'S LEARNING CENTRE AT IUCAA CAMPUS**

CLIENT : THE DIRECTOR ,IUCAA

SCALE : NTS | DATE : 31.08.18 | DESIGN : KAVITA

ARCHITECT
RAJEEV VISHWI ASRAO
ARCHITECTS & PLANNERS
'SANSKRUTI' 3RD FLOOR, PLOT NO. 3, SADASHIV PETH, PUNE - 411 030. TEL. NO. - 020 24530008, 24532008

NO	REVISIONS

ALL DIMENSIONS SHALL BE CHECKED & CO-RELATED WITH STRUCTURAL / WORKING DRAWINGs & AMBIGUITY SHALL BE IMMEDIATELY BROUGHT TO THE NOTICE OF ARCHITECTS BEFORE ITS EXECUTION.
THE DRAWING SHOULD NOT BE SCALED & ONLY WRITTEN DIMENSIONS TO BE FOLLOWED.
ALL DIMENSIONS ARE IN METER UNLESS OTHERWISE SPECIFIED.

THIS DRAWING IS THE PROPERTY OF M/S RAJEEV VISHWI ASRAO ARCHITECTS (PUNE) & NOT TO BE COPIED OR USED WITHOUT THEIR WRITTEN PERMISSION.

C:\Users\PC\Dropbox\IUCAA - TLC - FURNITURE DETAILS TABLES- 20.1.200_.dwg

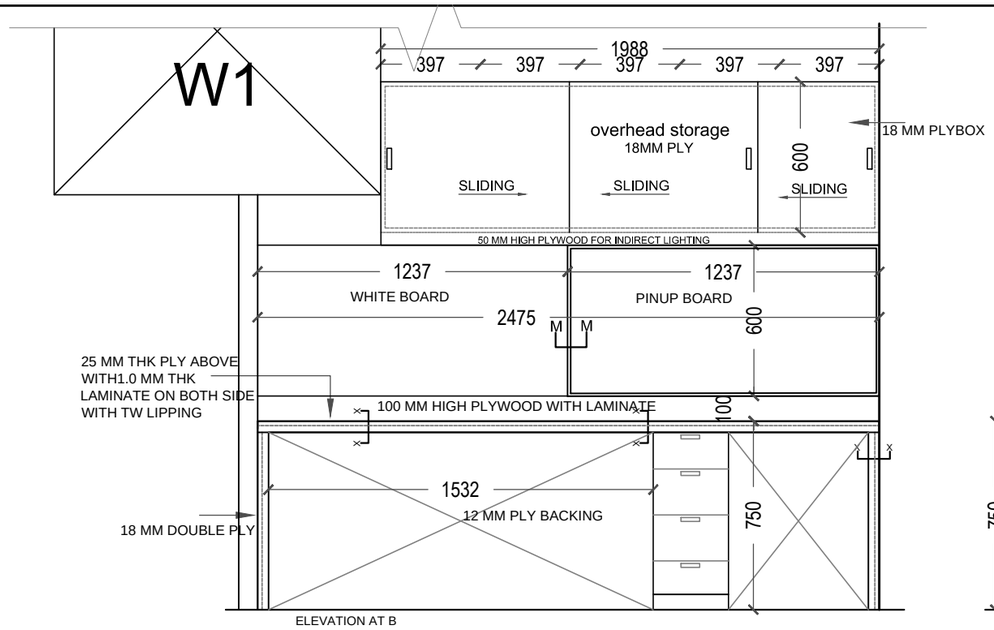

ELEVATION AT B

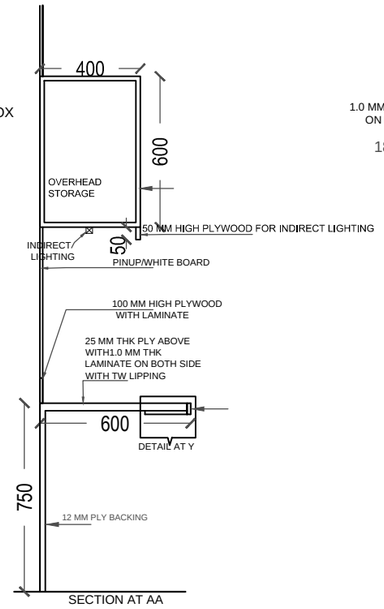

SECTION AT AA

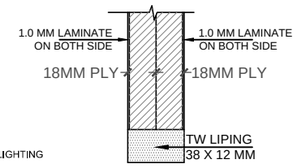

SECTION - XX

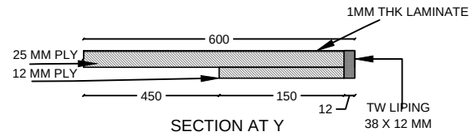

SECTION AT Y

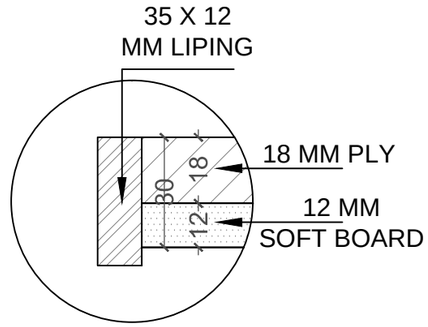

DETAIL AT Y

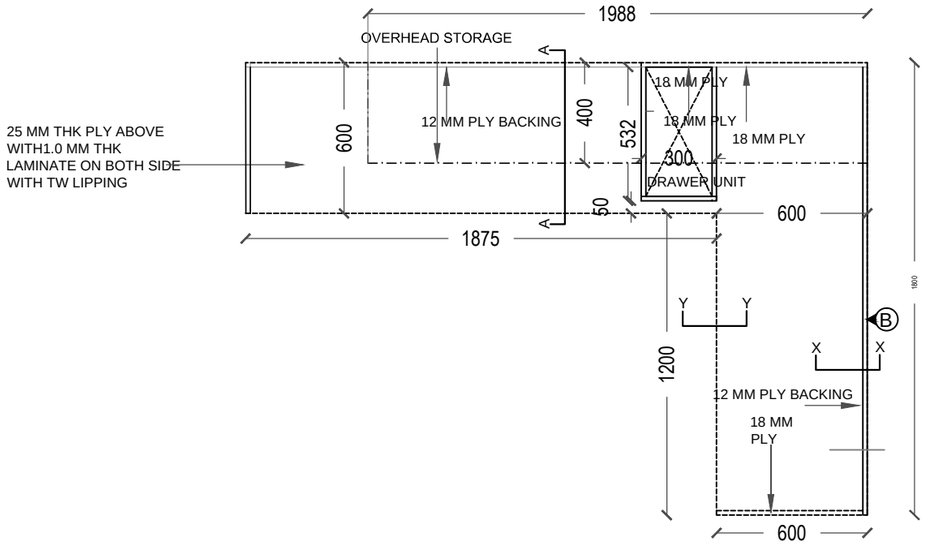

PLAN BELOW TABLE TOP

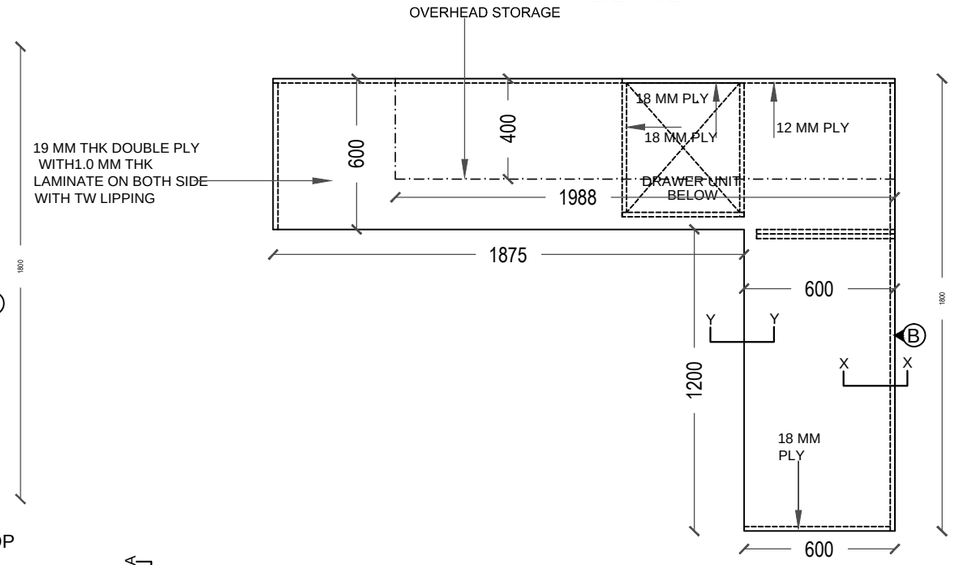

PLAN ABOVE TABLE TOP

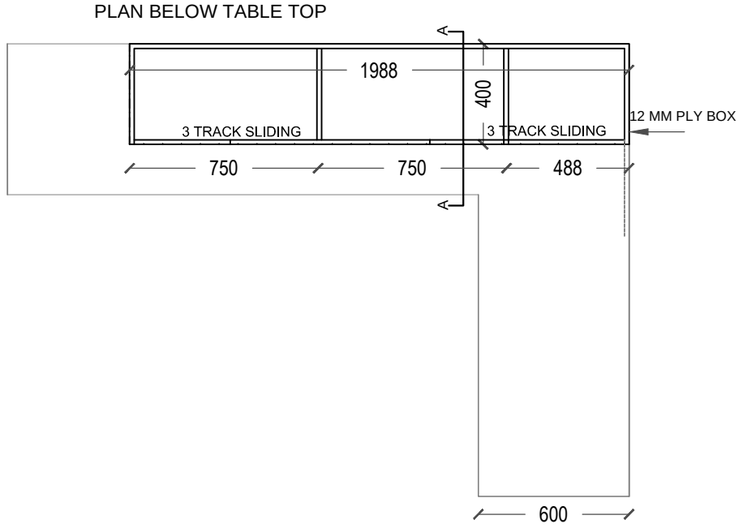

PLAN AT OVERHEAD STORAGE LEVEL

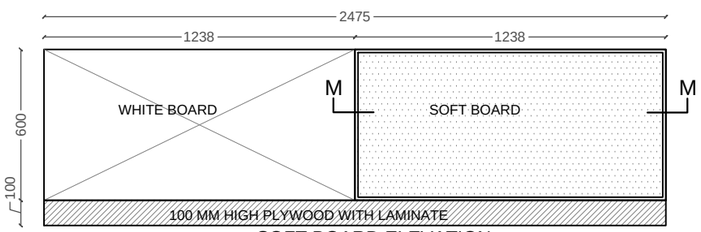

SOFT BOARD ELEVATION

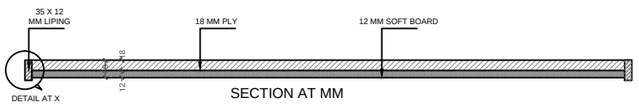

SOFT BOARD SECTION

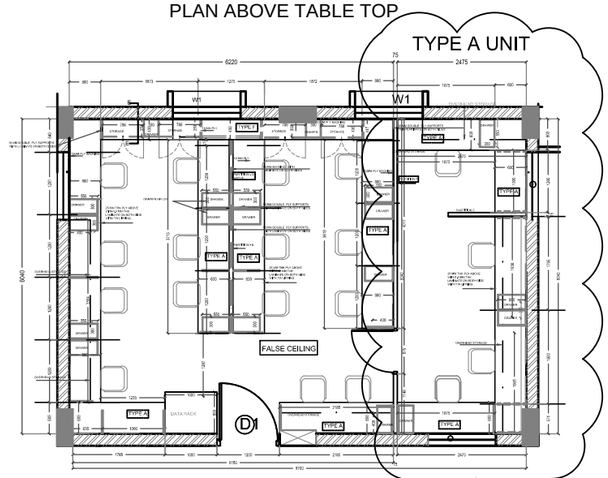

COMPUTER CENTER-STAFFROOM-1ST FLOOR
TYPE A UNIT DETAILS

DRG. NO.	IU/TLC/IN/222	DATE : 17.12.19

S M N W

TITLE : TABLE TYPE A DETAILS

PROJECT : **TEACHER'S LEARNING CENTRE AT IUCAA CAMPUS**

CLIENT :THE DIRECTOR ,IUCAA

SCALE : NTS | DATE : 31.08.18 | DESIGN : KAVITA

ARCHITECT
RAJEEV VISHWI ASRAO
ARCHITECTS & PLANNERS
'SANSKRUTI' 3RD FLOOR, PLOT NO. 3, SADASHIV PETH, PUNE - 411 030. TEL NO. - 020 24530008, 24532008

NO.	REVISIONS

ALL DIMENSIONS SHALL BE CHECKED & CO-RELATED WITH STRUCTURAL / WORKING DRAWINGS & AMBIGUITY SHALL BE IMMEDIATELY BROUGHT TO THE NOTICE OF THE ARCHITECTS BEFORE ITS EXECUTION.
THIS DRAWING SHOULD NOT BE SCALED & ONLY WRITTEN DIMENSIONS TO BE FOLLOWED.
ALL DIMENSIONS ARE IN METER UNLESS OTHERWISE SPECIFIED.

THIS DRAWING IS THE PROPERTY OF M/S RAJEEV VISHWI ASRAO ARCHITECTS (PUNE) & NOT TO BE COPIED OR USED WITHOUT THEIR WRITTEN PERMISSION.

C:\Users\PC\Desktop\TLC\IUCAA - TLC - FURNITURE DETAILS TABLES- 2013 2020_.dwg

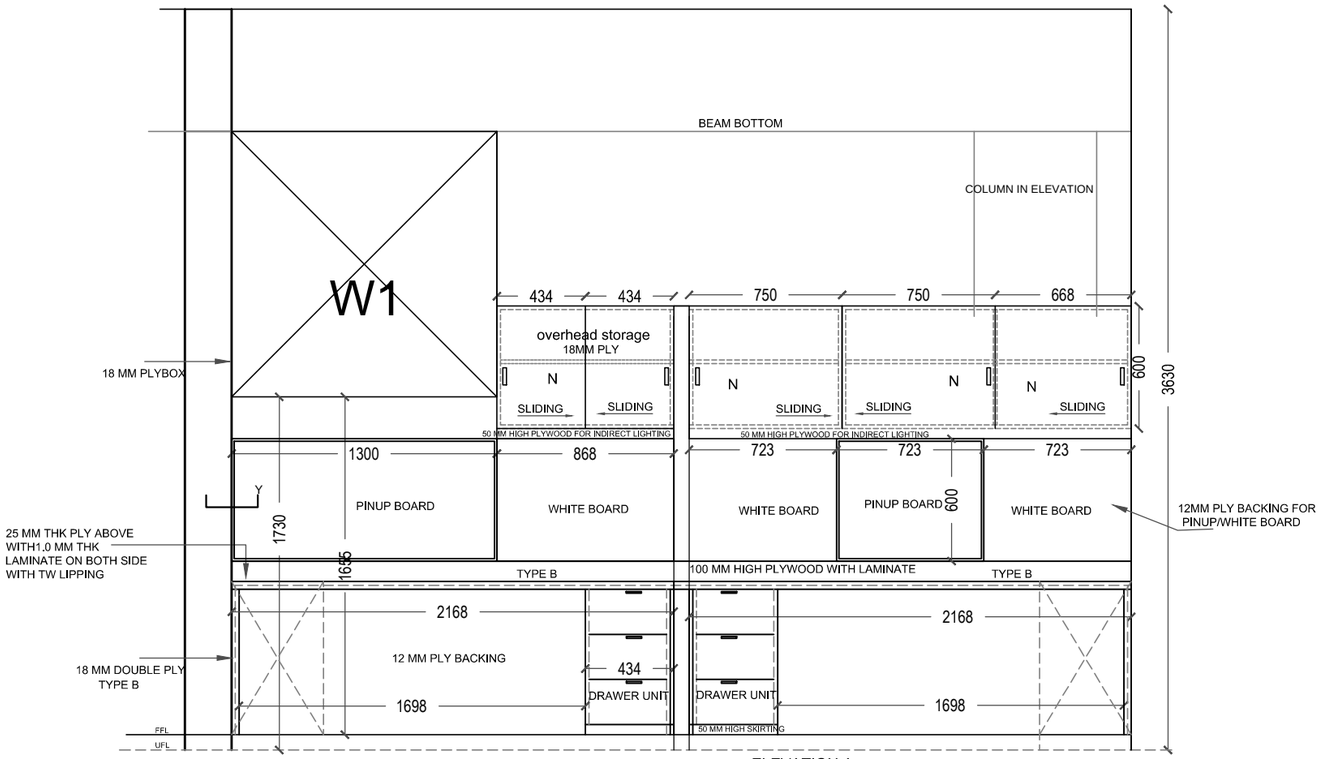

ELEVATION A

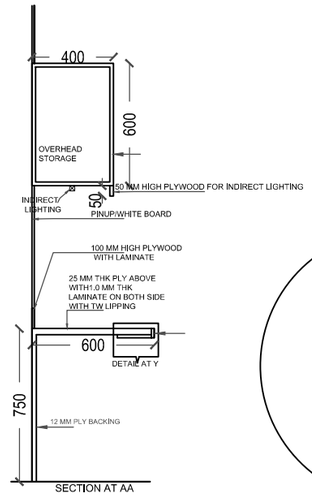

SECTION AT AA

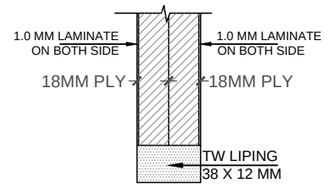

SECTION - XX

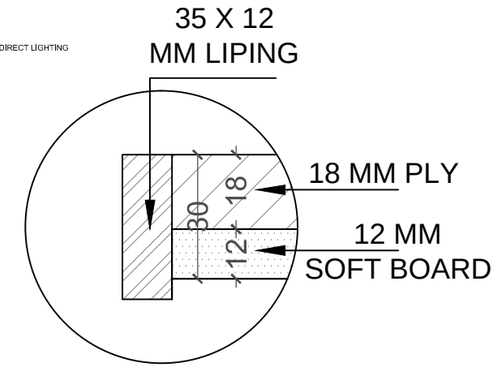

DETAIL AT Y

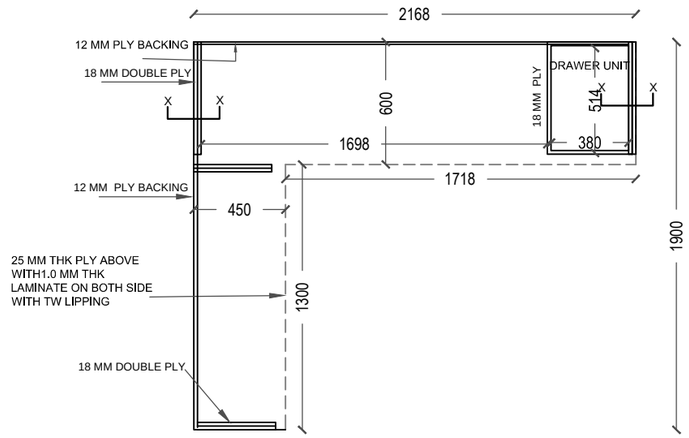

PLAN BELOW TABLE TOP
TYPE B

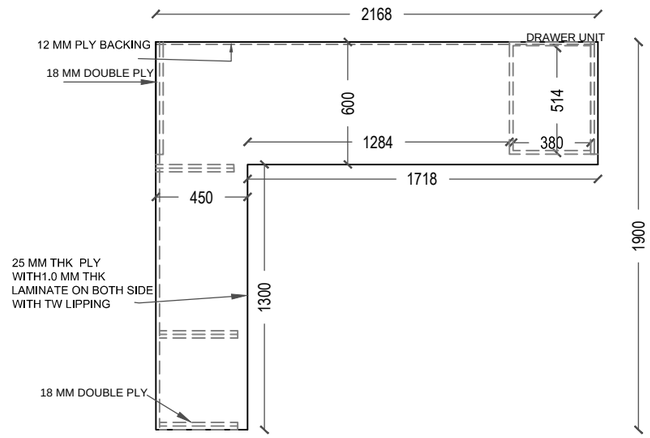

PLAN ABOVE TABLE TOP
TYPE B

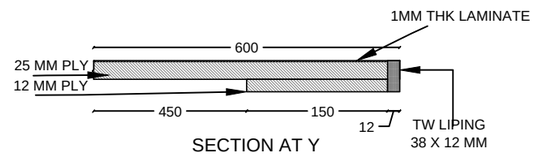

SECTION AT Y

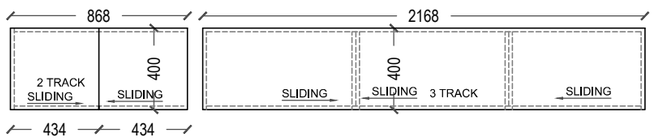

PLAN OF OVERHEAD STORAGE

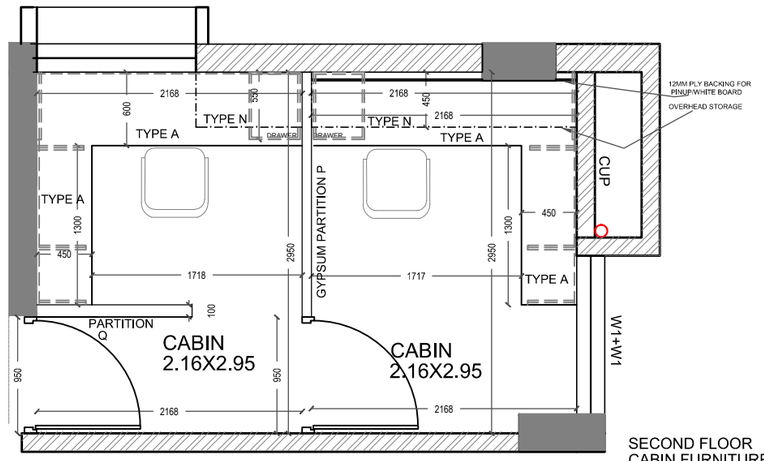

KEY PLAN-CABIN
2ND FLOOR

SECOND FLOOR
CABIN FURNITURE DETAILS
TYPE 'B' TABLE

DRG. NO.
IU/TLC/IN/342
DATE : 17.12.19

TITLE : CABIN FURNITUR DETAILS
PROJECT : TEACHER'S LEARNING CENTRE AT IUCAA CAMPUS
CLIENT : THE DIRECTOR ,IUCAA
SCALE : NTS | DATE : 31.08.18 | DESIGN : KAVITA

ARCHITECT
RAJEEV VISHWI ASRAO
ARCHITECTS & PLANNERS
'SANSKRUTI' 3RD FLOOR, PLOT NO. 2, SAGASHIV PETH,
PUNE - 411 030. TEL NO. - 020 24530008, 24532008

NO.	REVISIONS

ALL DIMENSIONS SHALL BE CHECKED & CO-RELATED WITH STRUCTURAL / WORKING DRAWINGs & AMBIGUITY SHALL BE IMMEDIATELY BROUGHT TO THE NOTICE OF THE ARCHITECTS BEFORE ITS EXECUTION.
THIS DRAWING SHOULD NOT BE SCALED & ONLY WRITTEN DIMENSIONS TO BE FOLLOWED.
ALL DIMENSIONS ARE IN METER UNLESS OTHERWISE SPECIFIED.

THIS DRAWING IS THE PROPERTY OF M/S RAJEEV VISHWI ASRAO ARCHITECTS,(PUNE) & NOT TO BE COPIED OR USED WITHOUT THEIR WRITTEN PERMISSION.

C:\Users\PC\Desktop\TLC\IUCAA - TLC - FURNITURE DETAILS TABLES- 20.1.2020_.dwg

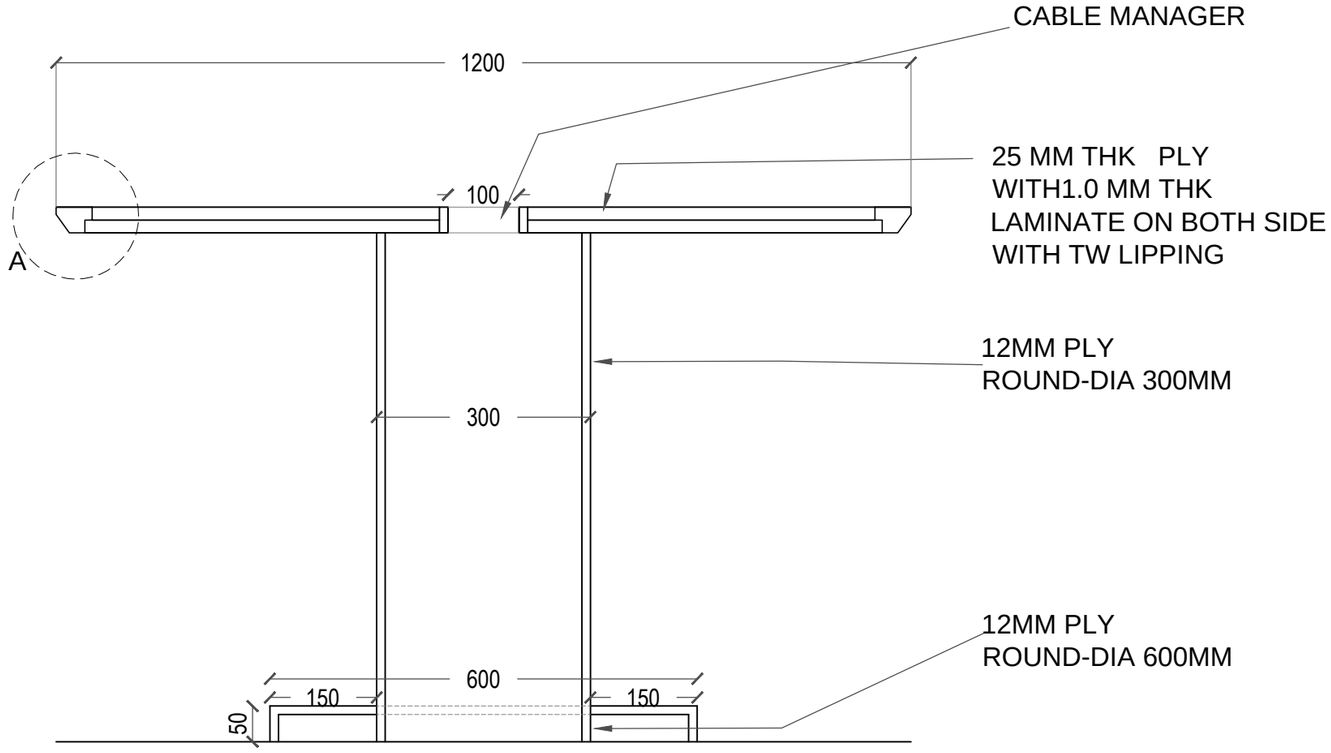

SECTION

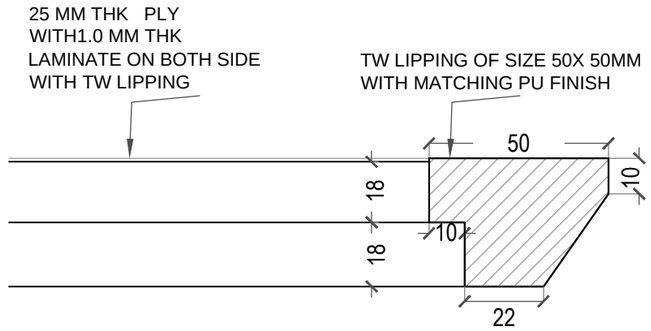

DETAIL AT 'A'

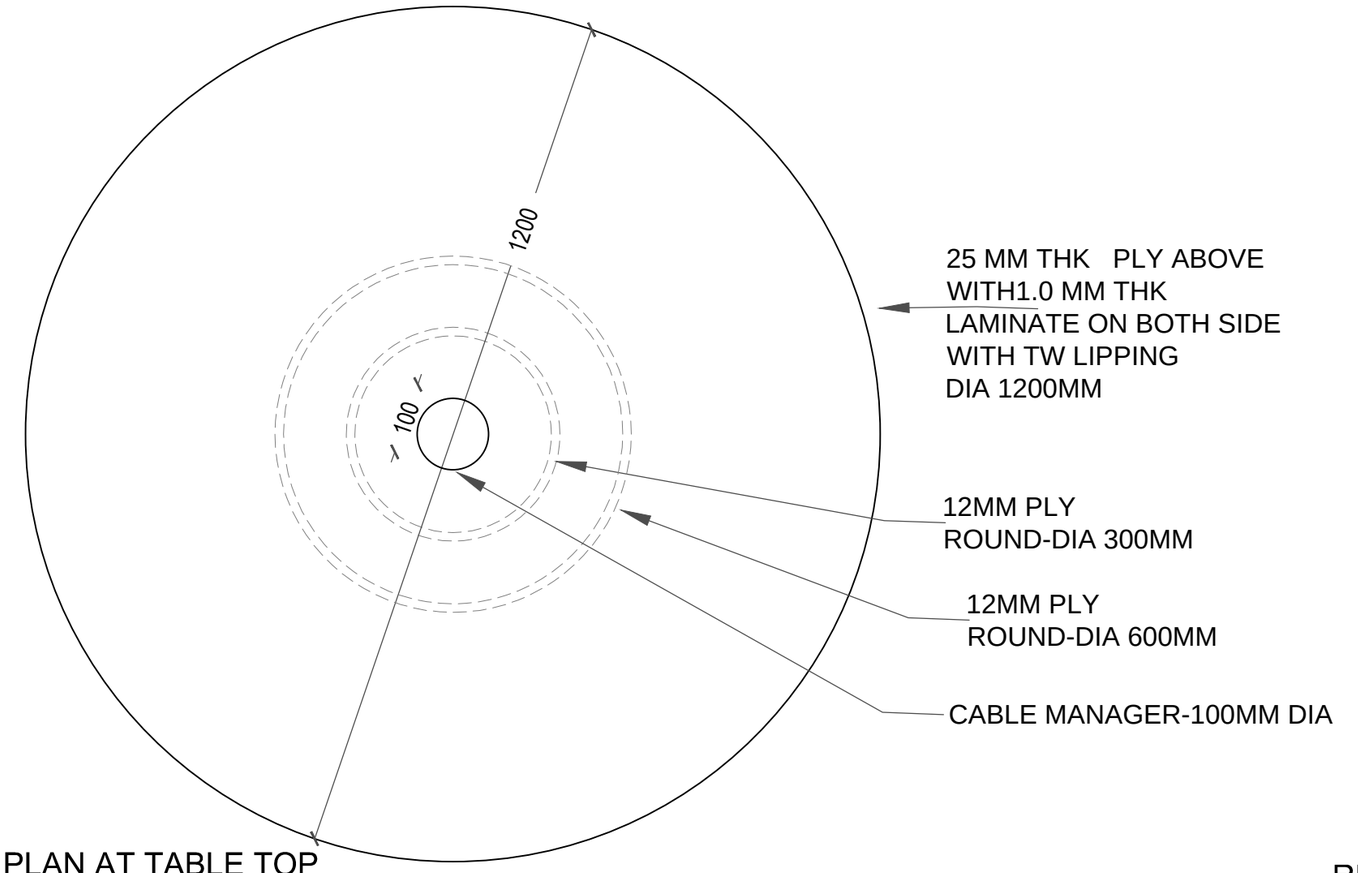

PLAN AT TABLE TOP

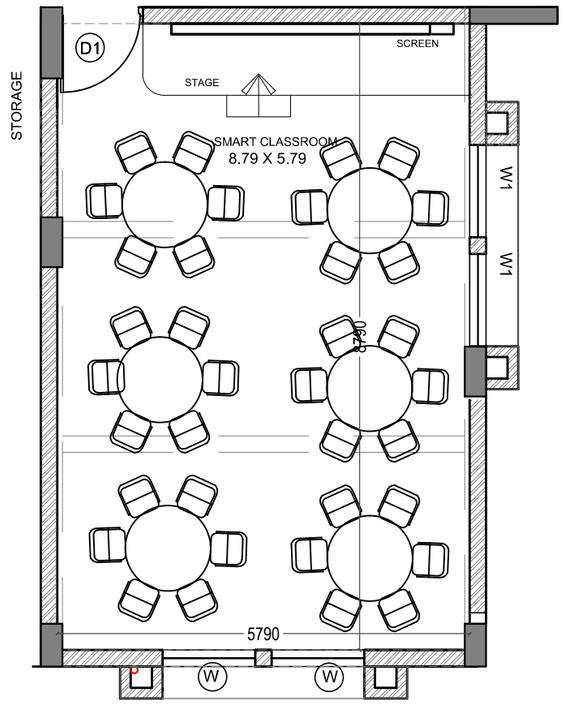

SMART CLASSROOM

REQD=6NOS.

FIRST FLOOR
SMART CLASSROOM
ROUND TABLE DETAILS

DRG. NO.
IU/TLC/IN/232
DATE : 17.12.19

TITLE : SMART CLASSROOM ROUND TABLE DETAILS
PROJECT : TEACHER'S LEARNING CENTRE AT IUCAA CAMPUS
CLIENT : THE DIRECTOR ,IUCAA
SCALE : NTS | DATE : 31.08.18 | DESIGN : KAVITA

ARCHITECT
RAJEEV VISHWI ASRAO
ARCHITECTS & PLANNERS
'SANSKRUTI' 3RD FLOOR, PLOT NO. 2, SADASHIV PETH,
PUNE - 411 030. TEL NO. - 020 24530008, 24532008

NO.	REVISIONS

ALL DIMENSIONS SHALL BE CHECKED & CO-RELATED WITH STRUCTURAL / WORKING DRAWINGS & AMBIGUITY SHALL BE IMMEDIATELY BROUGHT TO THE NOTICE OF THE ARCHITECTS BEFORE ITS EXECUTION.
THIS DRAWING SHOULD NOT BE SCALED & ONLY WRITTEN DIMENSIONS TO BE FOLLOWED.
ALL DIMENSIONS ARE IN METER UNLESS OTHERWISE SPECIFIED.

THIS DRAWING IS THE PROPERTY OF
M/S RAJEEV VISHWI ASRAO ARCHITECTS (PUNE)
& NOT TO BE COPIED OR USED WITHOUT
THEIR WRITTEN PERMISSION.

C:\Users\PC\Desktop\TLC\IUCAA - TLC - FURNITURE DETAILS TABLES- 20.1.2020_.dwg

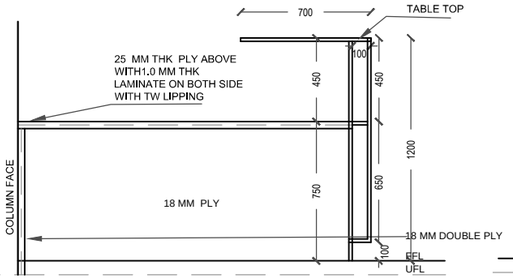

SECTION X-X

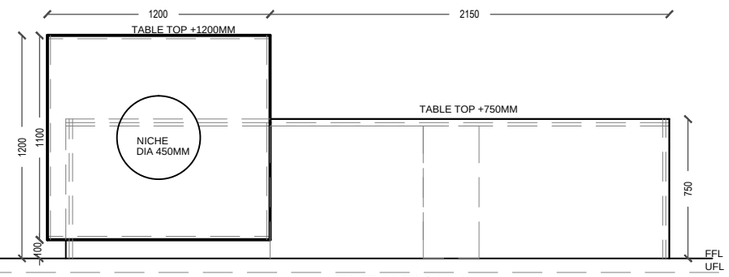

ELEVATION A

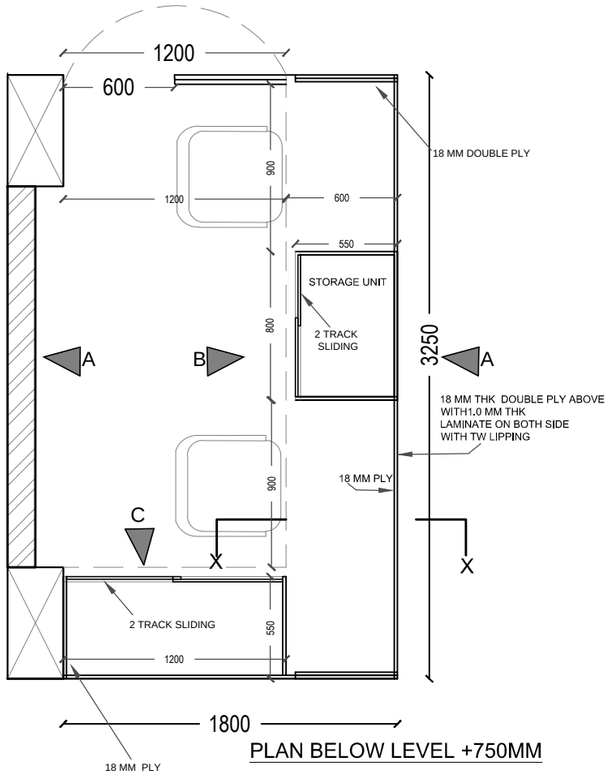

PLAN BELOW LEVEL +750MM

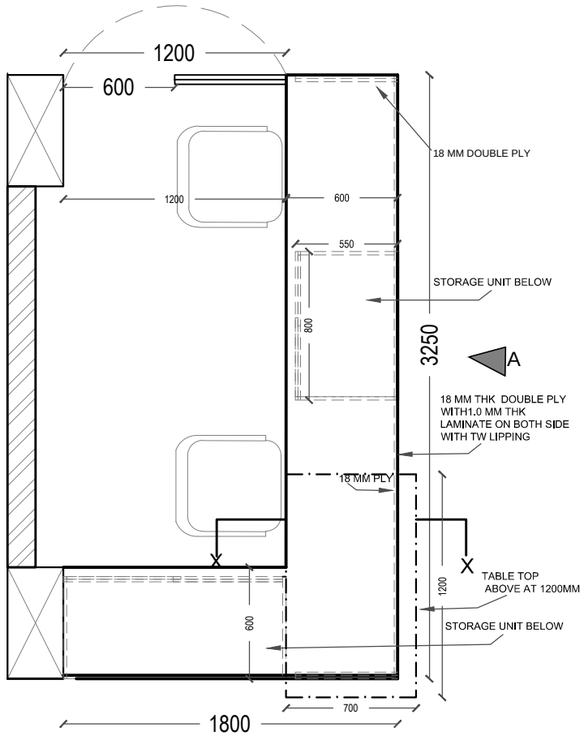

PLAN AT LEVEL +750MM

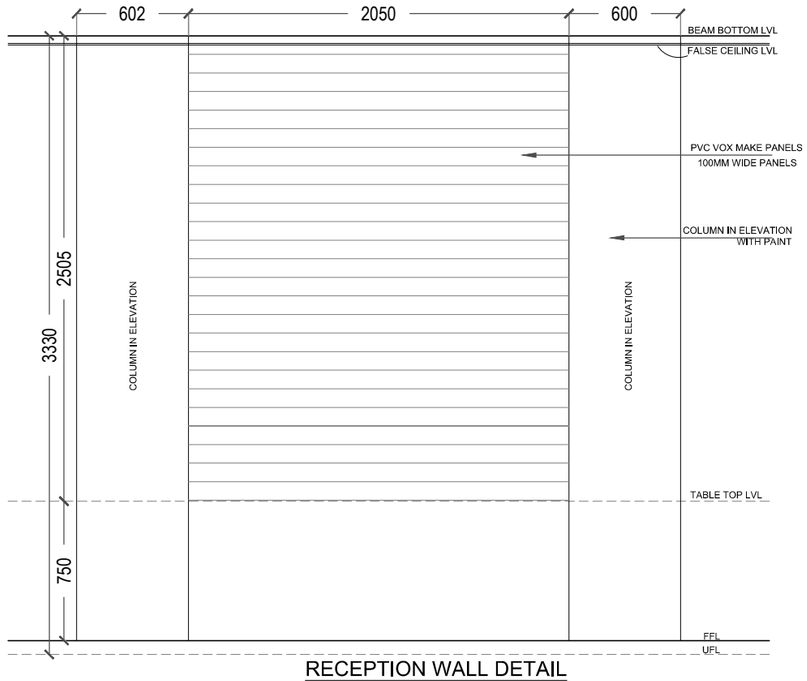

RECEPTION WALL DETAIL
ELEVATION 'A'

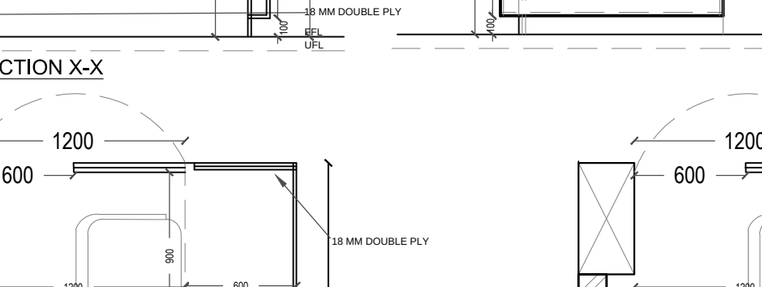

ELEVATION B

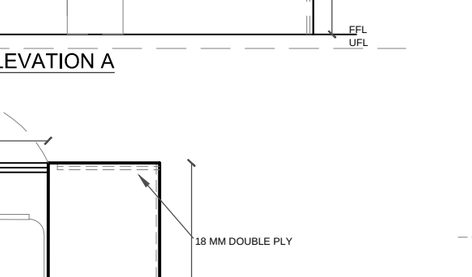

ELEVATION C

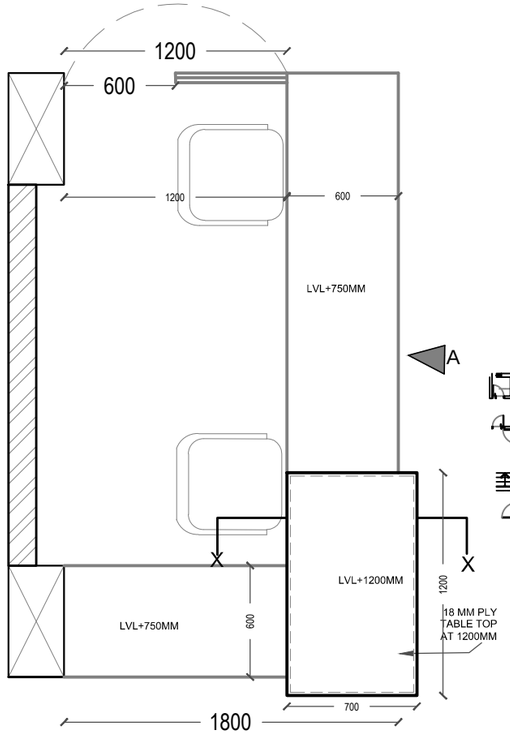

PLAN AT LEVEL +1200MM

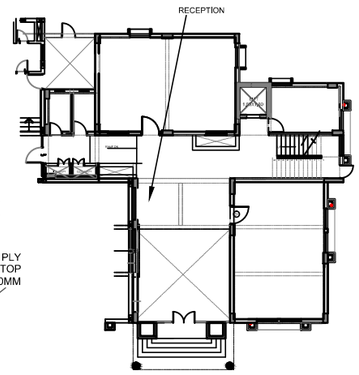

GROUND FLOOR KEY PLAN

DRG. NO.
IU/TLC/IN/130
DATE : 3.1.2020

TITLE : RECEPTION TABLE DETAILS
PROJECT : TEACHER'S LEARNING CENTRE AT IUCAA CAMPUS
CLIENT :THE DIRECTOR, IUCAA
SCALE : NTS | DATE : 31.08.18 | DESIGN : KAVITA

ARCHITECT
RAJEEV VISHWIASRAO
ARCHITECTS & PLANNERS
'SANSKRUTI' 3RD FLOOR, PLOT NO.2, SADASHIV PETH, PUNE - 411 030. TEL NO. - (020) 24530008, 24532008

NO.	REVISIONS

ALL DIMENSIONS SHALL BE CHECKED & CO-RELATED WITH STRUCTURAL / WORKING DRAWINGs & AMBIGUITY SHALL BE IMMEDIATELY BROUGHT TO THE NOTICE OF THE ARCHITECTS BEFORE ITS EXECUTION.
THIS DRAWING IS TO BE READ WITH RELEVANT SCALED & ONLY WRITTEN DIMENSIONS TO BE FOLLOWED.
ALL DIMENSIONS ARE IN METER UNLESS OTHERWISE SPECIFIED.

THIS DRAWING IS THE PROPERTY OF M/S RAJEEV VISHWIASRAO ARCHITECTS,(PUNE). & NOT TO BE COPIED OR USED WITHOUT THEIR WRITTEN PERMISSION.

C:Users/PC/Desktop/TLC/IUCAA - TLC-RECEPTION TABLE DETAILS-20.1.2020.dwg

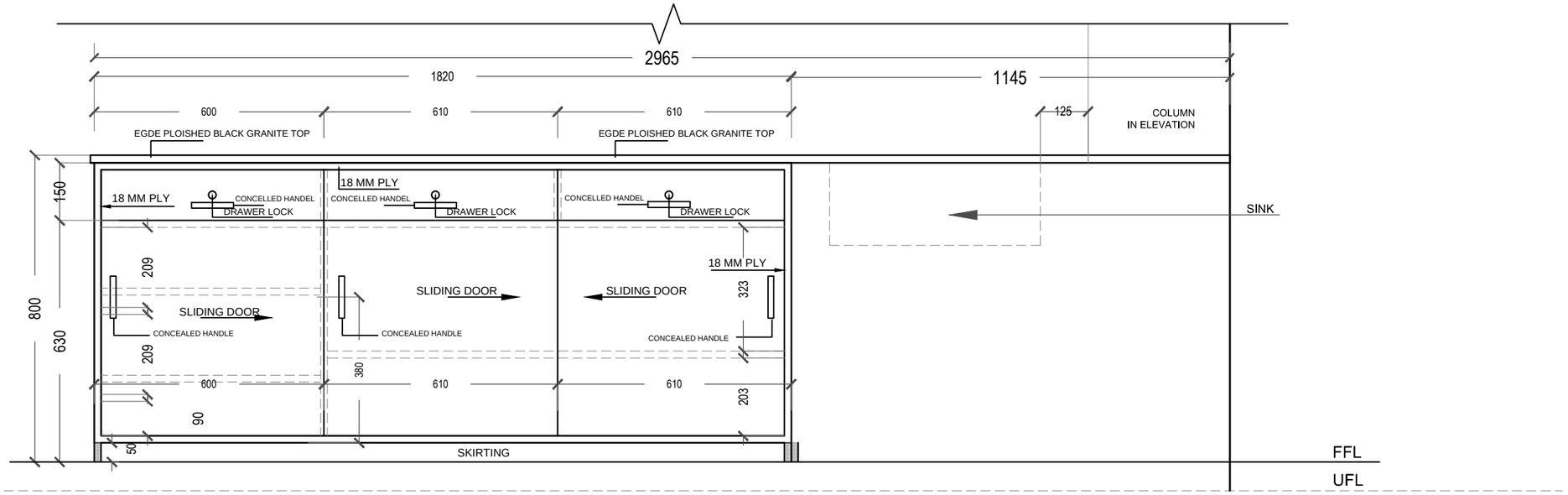

ELEVATION

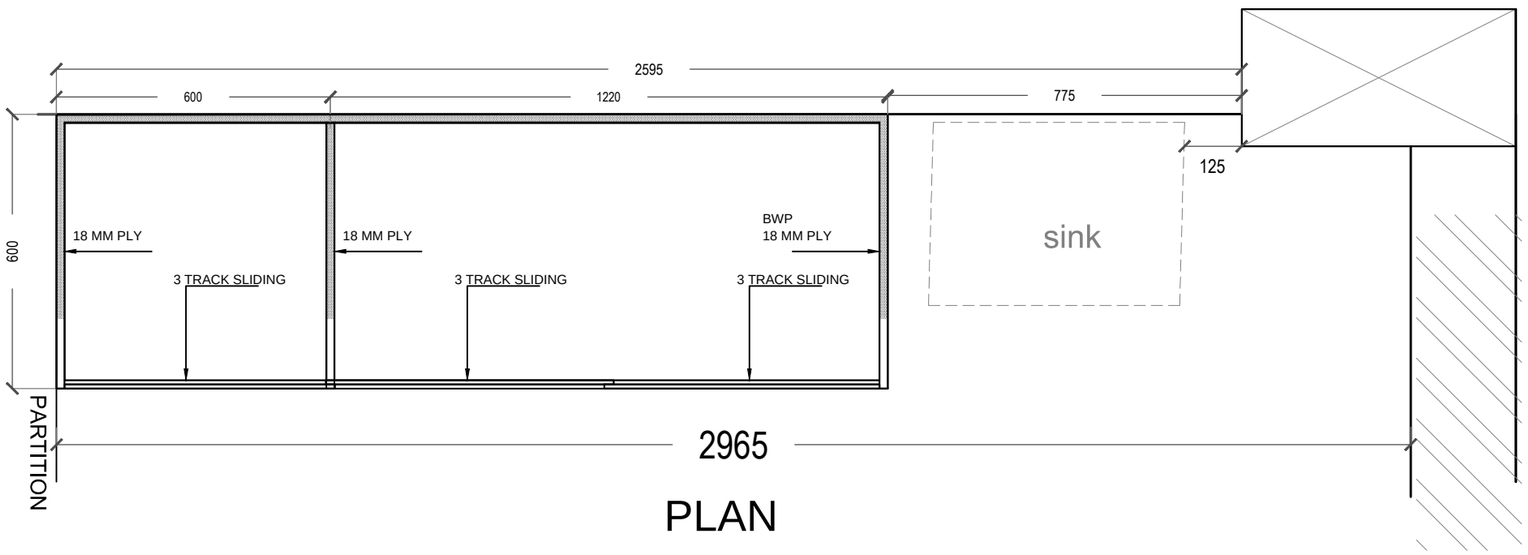

PLAN

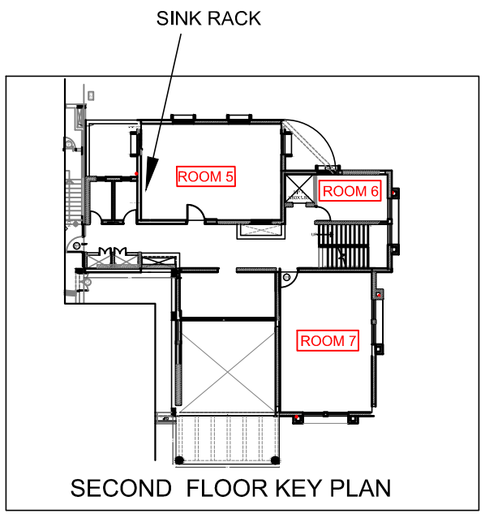

SECOND FLOOR KEY PLAN

SINK RACK DETAILS- TELESCOPE MAKING LAB

DRG. NO.
IU/TLC/IN/350
DATE : 20.1.2020

TITLE : TELESCOPE MAKING LAB- SINK RACK DETAILS
PROJECT : **TEACHER'S LEARNING CENTRE AT IUCAA CAMPUS**
CLIENT :THE DIRECTOR ,IUCAA
SCALE : NTS | DATE : 31.08.18 | DESIGN : KAVITA

ARCHITECT
RAJEEV VISHWI ASRAO
ARCHITECTS & PLANNERS
'SANSKRUTI' 3RD FLOOR, PLOT NO. 3, SADASHIV PETH,
PUNE - 411 030. TEL. NO. - 020 24530008, 24532008

NO.	REVISIONS

ALL DIMENSIONS SHALL BE CHECKED & CO-RELATED WITH STRUCTURAL / WORKING DRAWINGS & AMBIGUITY SHALL BE IMMEDIATELY BROUGHT TO THE NOTICE OF THE ARCHITECTS BEFORE ITS EXECUTION.
THE DRAWINGS SHOULD NOT BE SCALED & ONLY WRITTEN DIMENSIONS TO BE FOLLOWED.
ALL DIMENSIONS ARE IN METER UNLESS OTHERWISE SPECIFIED.

THIS DRAWING IS THE PROPERTY OF
M/S RAJEEV VISHWI ASRAO ARCHITECTS (PUNE)
& NOT TO BE COPIED OR USED WITHOUT
THEIR WRITTEN PERMISSION.

C:\Users\PC\Desktop\TLC\IUCAA - TLC - SINK RACK_DATA RACK- 20.1.2020_.dwg

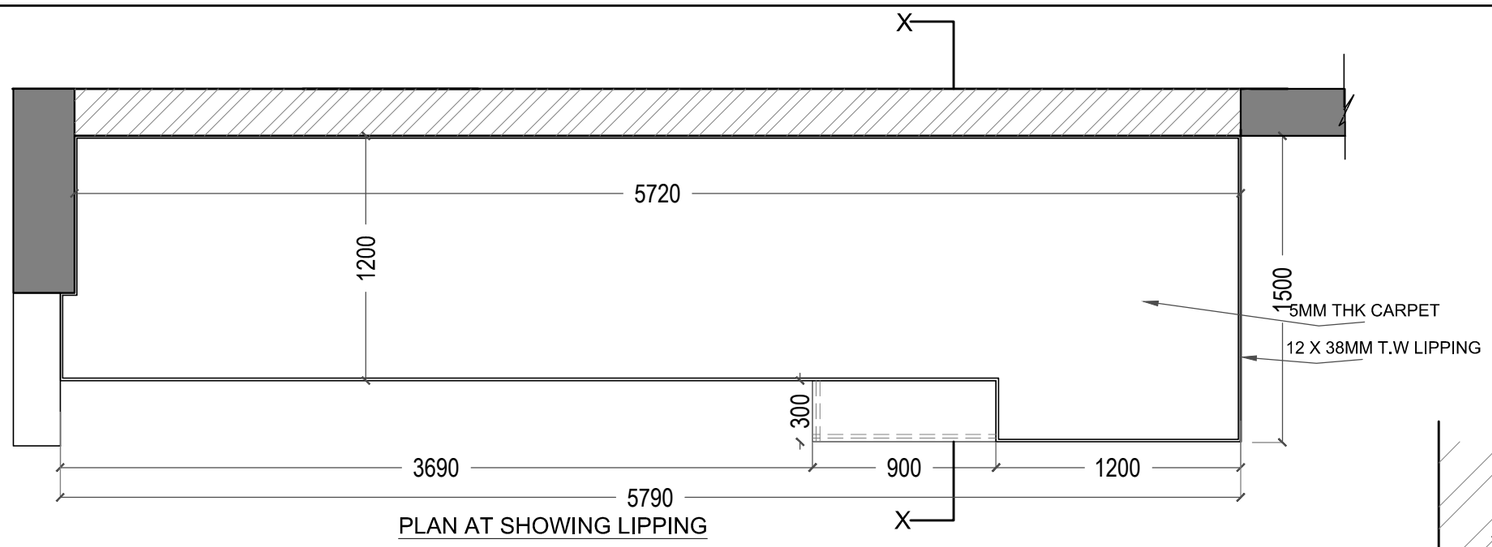

PLAN AT SHOWING LIPPING

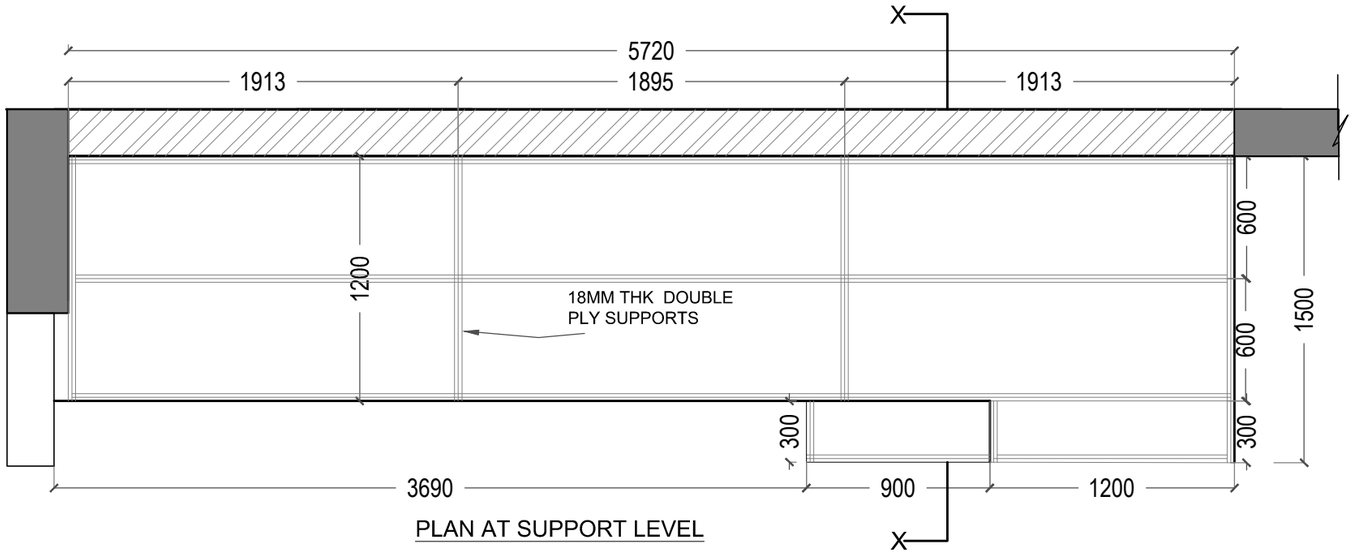

PLAN AT SUPPORT LEVEL

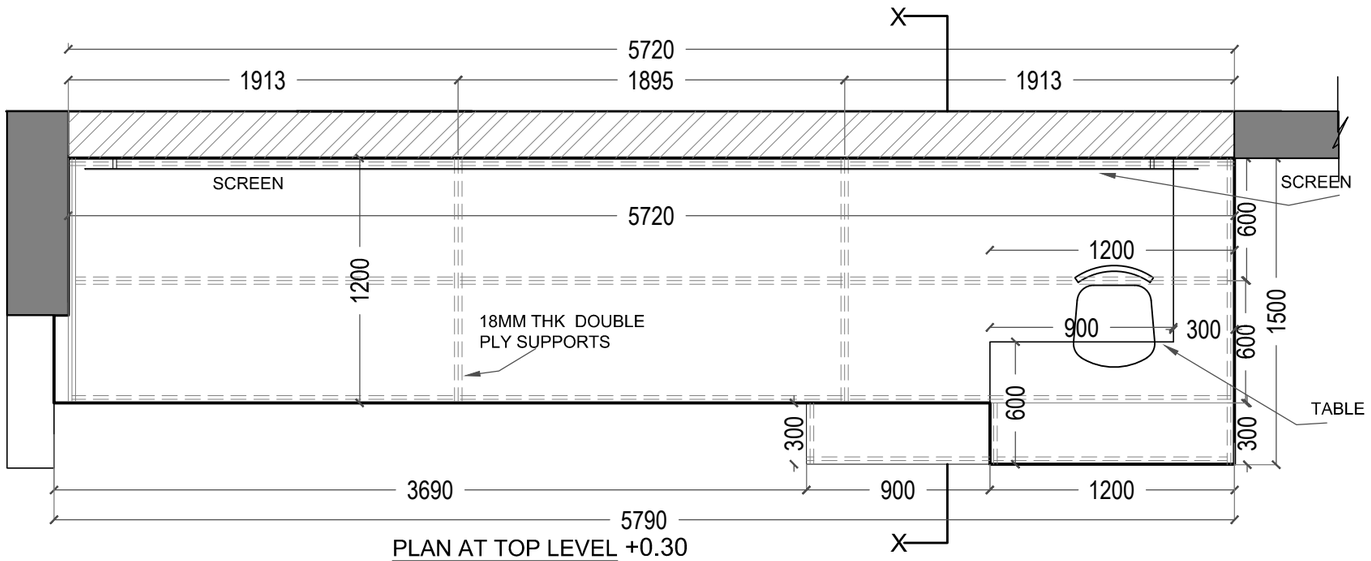

PLAN AT TOP LEVEL +0.30

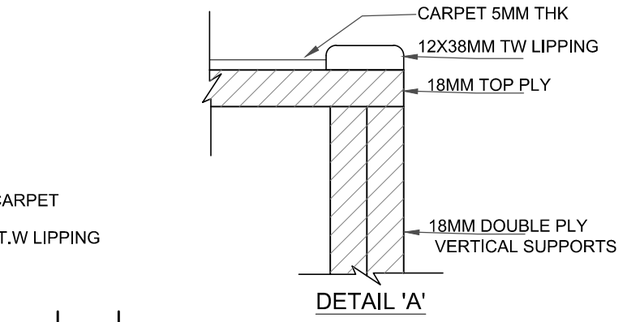

DETAIL 'A'

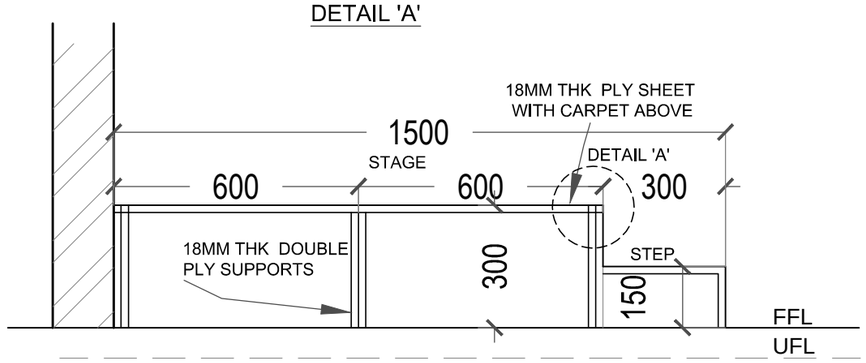

SECTION X-X

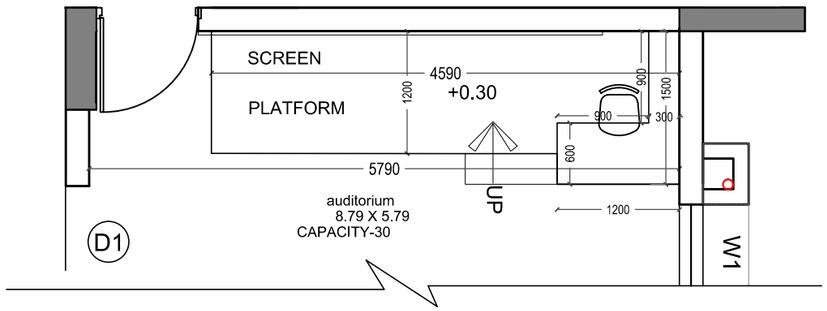

SMART CLASSROOM STAGE KEY PLAN

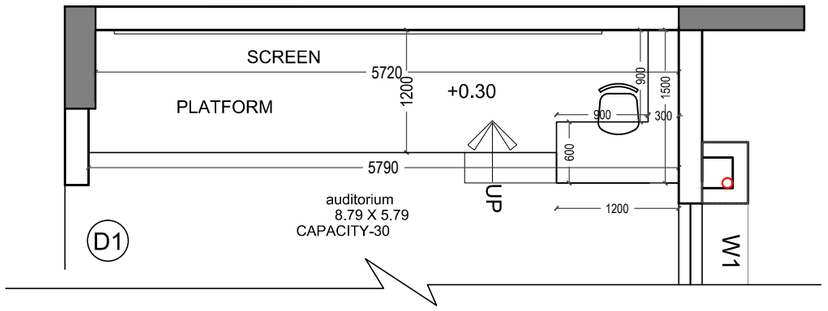

AUDITORIUM STAGE KEY PLAN

DRG. NO.
IU/TLC/IN/124
DATE : 23.12.19

TITLE : AUDITORIUM STAGE DETAILS
PROJECT : TEACHER'S LEARNING CENTRE AT IUCAA CAMPUS
CLIENT : THE DIRECTOR ,IUCAA
SCALE : NTS | DATE : 31.08.18 | DESIGN : KAVITA

ARCHITECT
RAJEEV VISHWI ASRAO
ARCHITECTS & PLANNERS
'SANSKRUTI' 3RD FLOOR, PLOT NO. 2, SADASHIV PETH,
PUNE - 411 030. TEL NO. - 020 24530008, 24532008

NO. REVISIONS

ALL DIMENSIONS SHALL BE CHECKED & CO-RELATED WITH STRUCTURAL / WORKING DRAWINGs & AMBIGUITY SHALL BE IMMEDIATELY BROUGHT TO THE NOTICE OF THE ARCHITECTS BEFORE ITS EXECUTION.
THIS DRAWING SHOULD NOT BE SCALED & ONLY WRITTEN DIMENSIONS TO BE FOLLOWED.
ALL DIMENSIONS ARE IN METER UNLESS OTHERWISE SPECIFIED.

THIS DRAWING IS THE PROPERTY OF M/S RAJEEV VISHWI ASRAO ARCHITECTS,(PUNE) & NOT TO BE COPIED OR USED WITHOUT THEIR WRITTEN PERMISSION.

C:\Users\PC\Desktop\TLC\IUCAA - TLC - STAGE DETAILS-20.12.2019.dwg

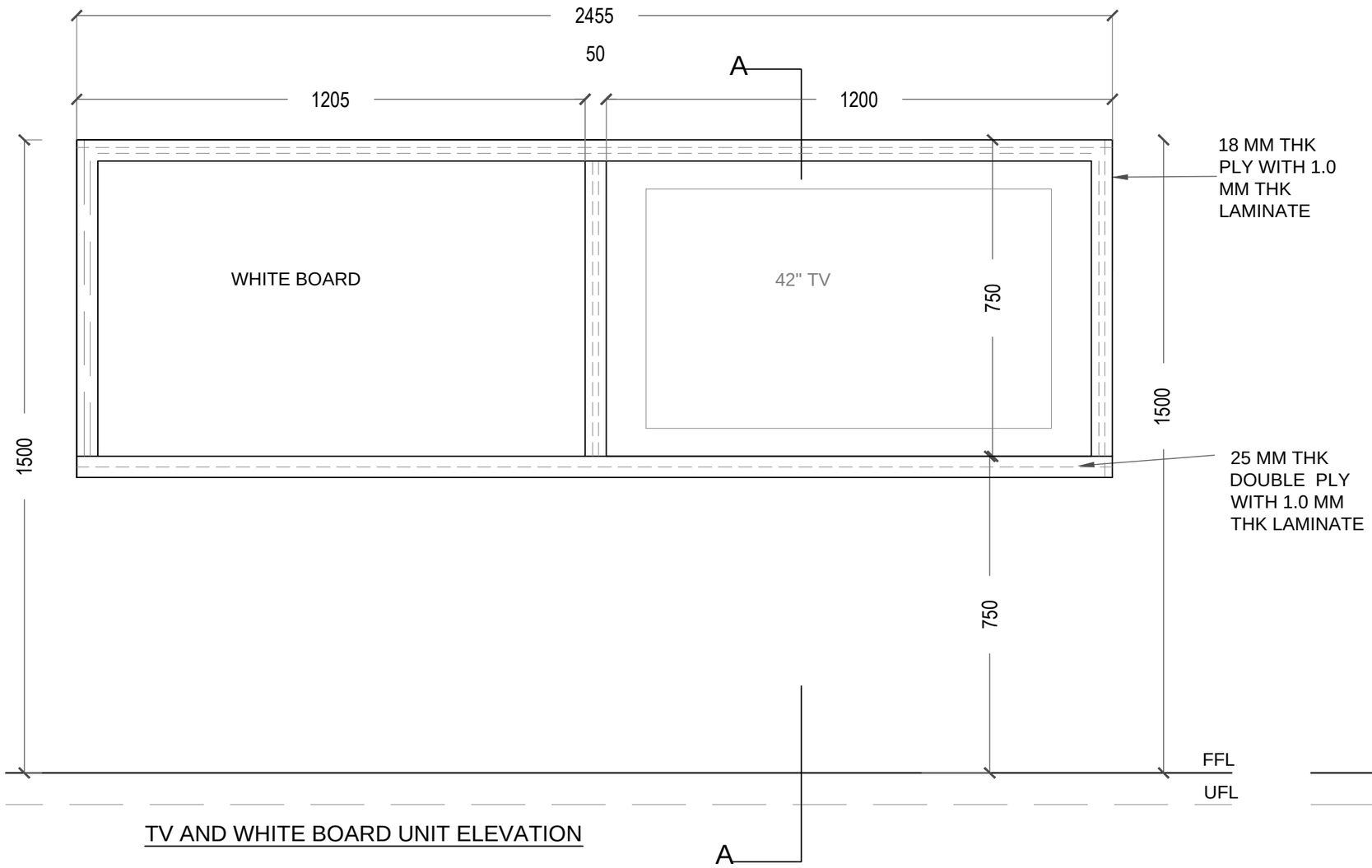

TV AND WHITE BOARD UNIT ELEVATION

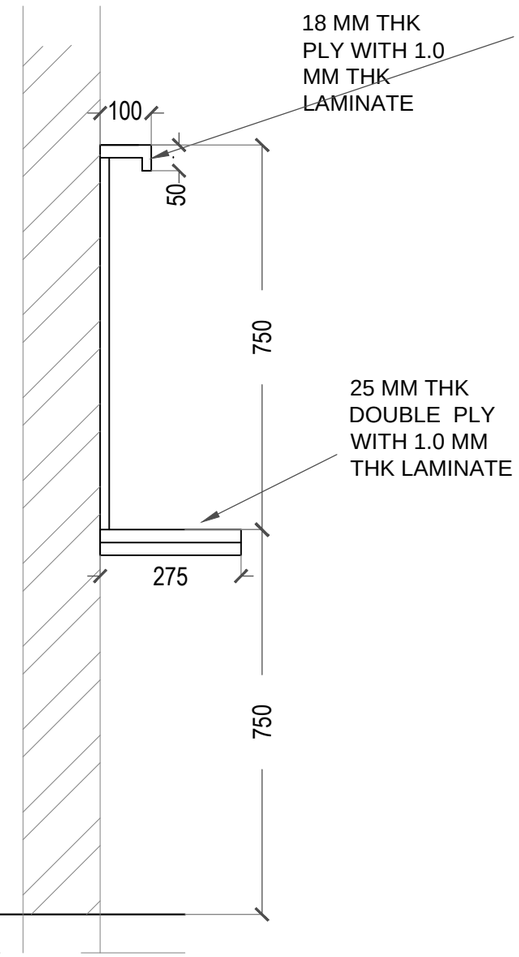

SECTION AA

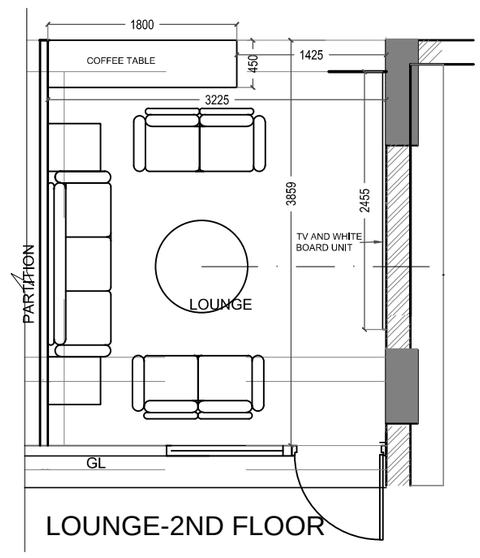

LOUNGE-2ND FLOOR

TV UNIT DETAILS

DRG. NO. IU/TLC/IN/L32

DATE : 13.12.19

TITLE : TV UNIT DETAILS AT LOUNGE

PROJECT : **TEACHER'S LEARNING CENTRE AT IUCAA CAMPUS**

CLIENT : THE DIRECTOR , IUCAA

SCALE : NTS | DATE : 31.08.18 | DESIGN : KAVITA

ARCHITECT
RAJEEV VISHWI ASRAO
ARCHITECTS & PLANNERS
'SANSKRUTI' 3RD FLOOR, PLOT NO. 2, SADASHIV PETH,
PUNE - 411 030 TEL NO. - 020 24530008, 24532008

NO	REVISIONS

ALL DIMENSIONS SHALL BE CHECKED & CO-RELATED WITH STRUCTURAL / WORKING DRAWINGs & AMBIGUITY SHALL BE IMMEDIATELY BROUGHT TO THE NOTICE OF THE ARCHITECTS BEFORE ITS EXECUTION.
THIS DRAWING SHALL NOT BE SCALED & ONLY WRITTEN DIMENSIONS TO BE FOLLOWED.
ALL DIMENSIONS ARE IN METER UNLESS OTHERWISE SPECIFIED.

THIS DRAWING IS THE PROPERTY OF
M/S RAJEEV VISHWJASRAO ARCHITECTS (PUNE)
& NOT TO BE COPIED OR USED WITHOUT
THEIR WRITTEN PERMISSION.

C:\Users\PC\Desktop\TLC\IUCAA - TLC - TV UNIT DETAILS-20.12.2019.dwg

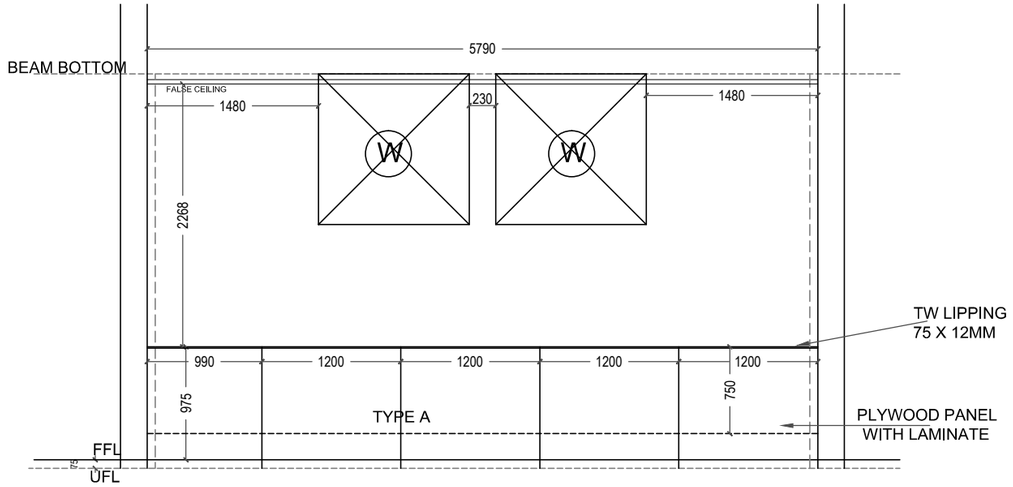

ELEVATION A

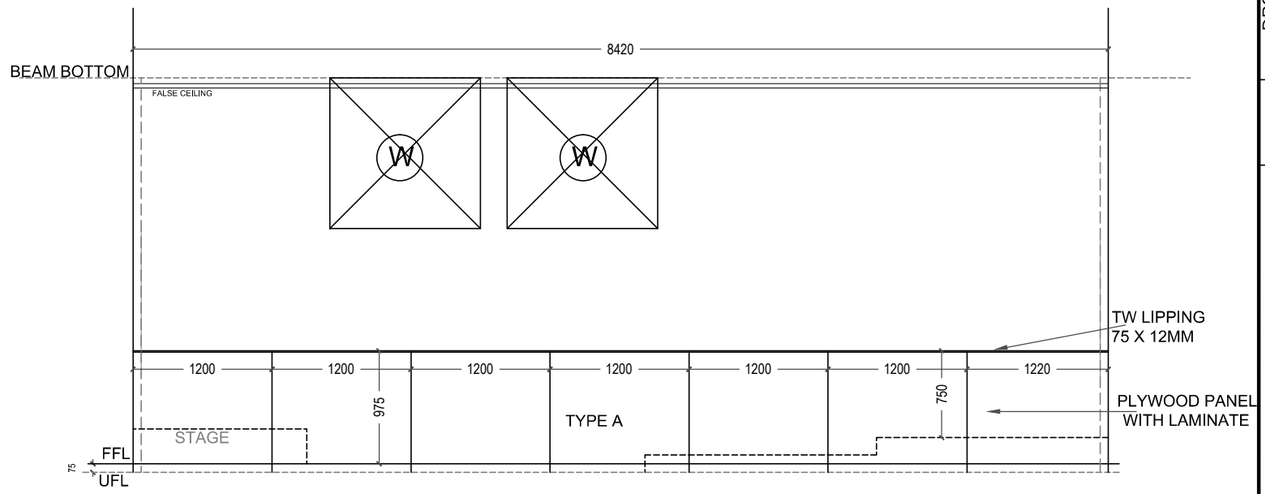

ELEVATION B

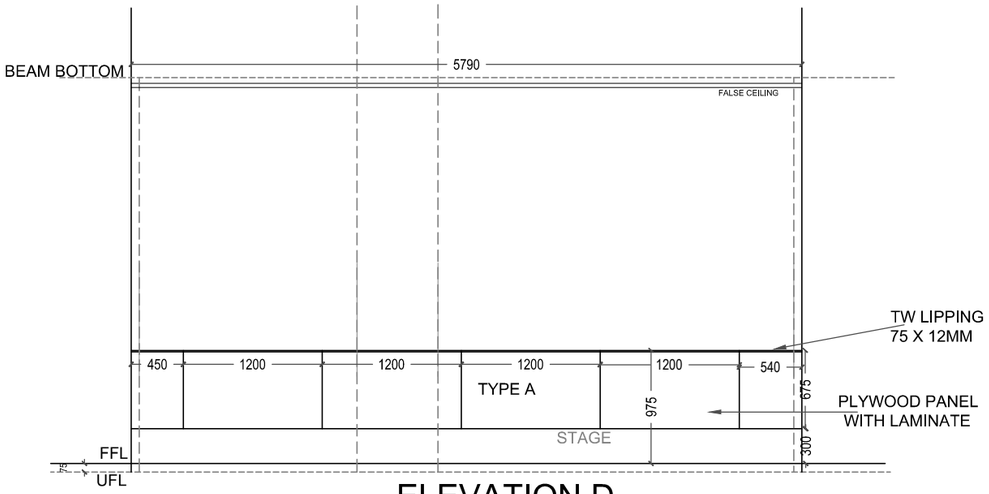

ELEVATION D

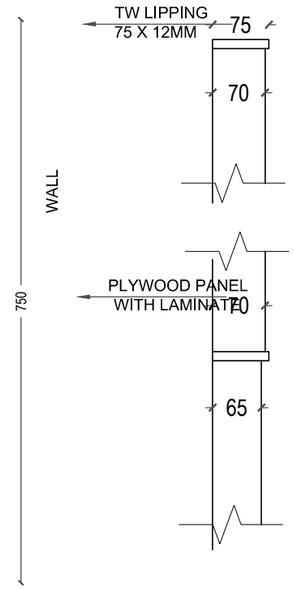

TYPICAL SECTION OF
TYPE A PANEL

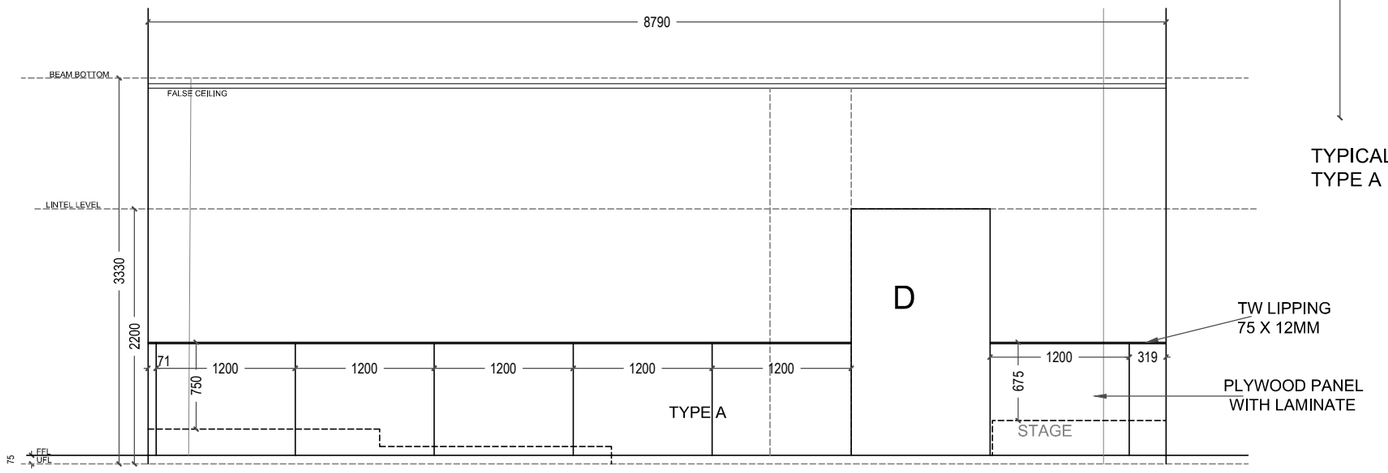

ELEVATION C

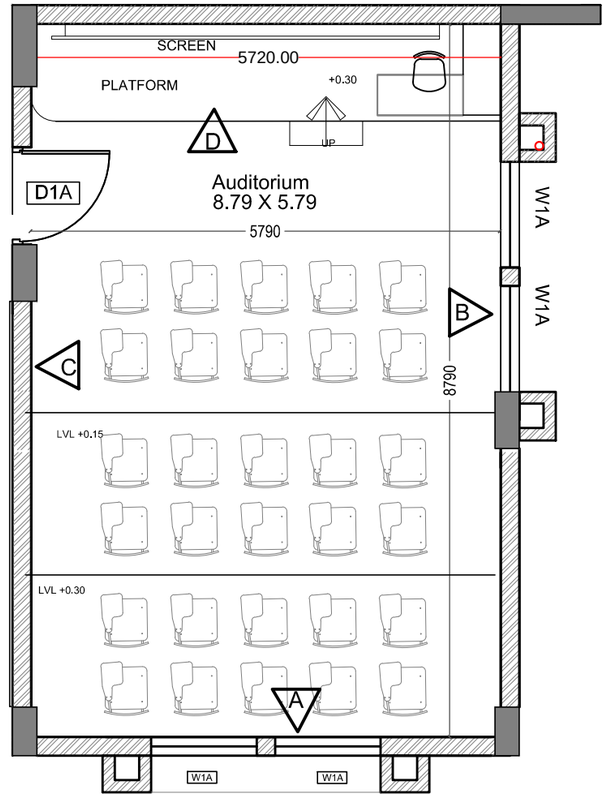

AUDITORIUM
WALL PANELLING DETAILS

DRG. NO.
IU/TLC/IN/123
DATE : 17.12.19

TITLE : AUDITORIUM-WALL PANELLING DETAILS
PROJECT : **TEACHER'S LEARNING CENTRE AT IUCAA CAMPUS**
CLIENT : THE DIRECTOR ,IUCAA
SCALE : NTS | DATE : 31.08.18 | DESIGN : KAVITA

ARCHITECT
RAJEEV VISHWJ ASRAO
ARCHITECTS & PLANNERS
'SANSKRUTI' 3RD FLOOR, PLOT NO. 2, SADASHIV PETH,
PUNE - 411 030. TEL. NO. - 020 24530008, 24532008

NO. REVISIONS

ALL DIMENSIONS SHALL BE CHECKED & CO-RELATED WITH STRUCTURAL / WORKING DRAWINGs & AMBIGUITY SHALL BE IMMEDIATELY BROUGHT TO THE NOTICE OF THE ARCHITECTS BEFORE ITS EXECUTION.
THE DRAWING SHOULD NOT BE SCALED & ONLY WRITTEN DIMENSIONS TO BE FOLLOWED.
ALL DIMENSIONS ARE IN METER UNLESS OTHERWISE SPECIFIED.

THIS DRAWING IS THE PROPERTY OF
MS RAJEEV VISHWJ ASRAO ARCHITECTS (PUNE)
& NOT TO BE COPIED OR USED WITHOUT
THEIR WRITTEN PERMISSION.

C:\Users\PC\Desktop\TLC\IUCAA-TLC-WALL PANEL
20.1.2020.dwg

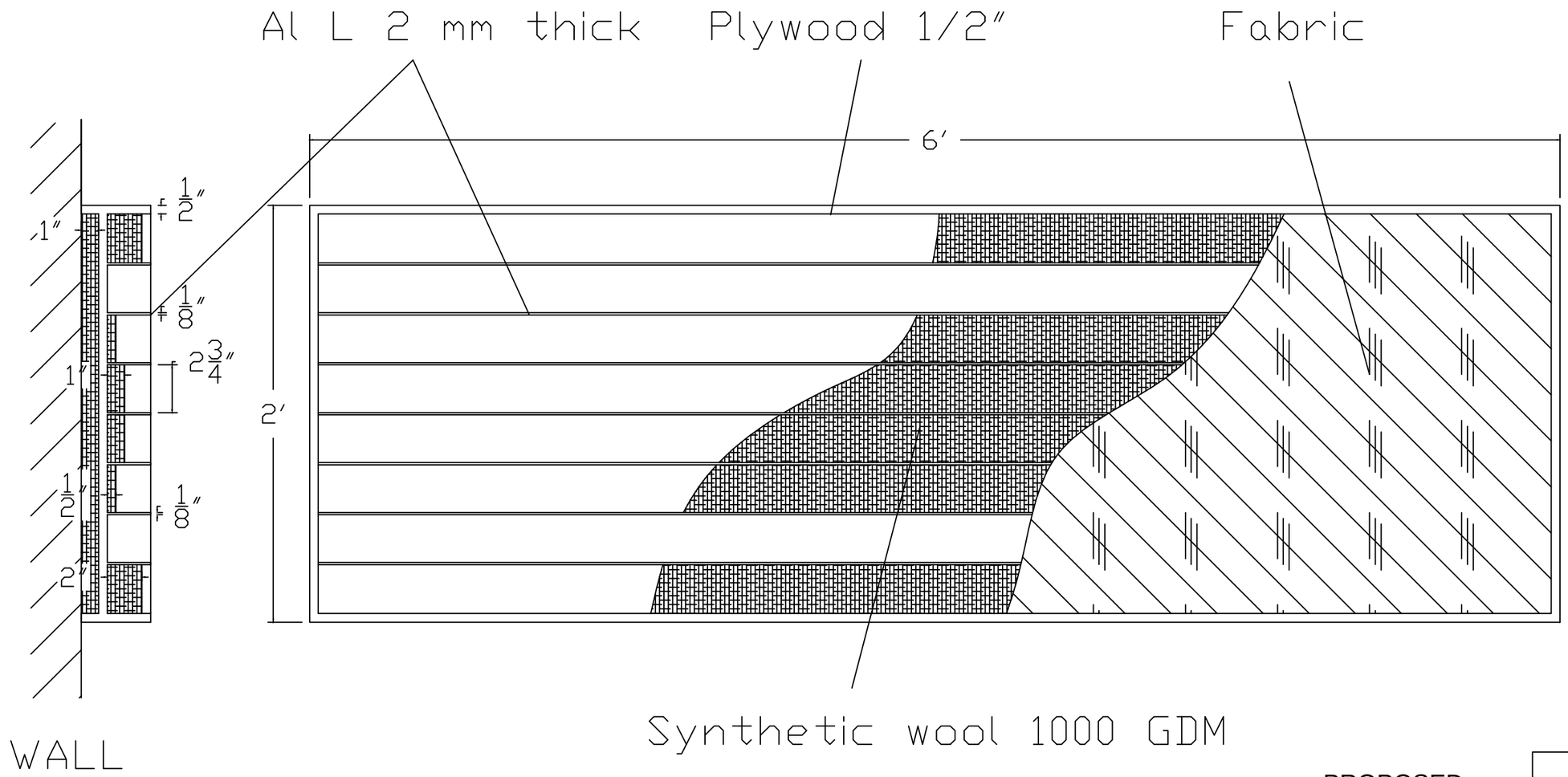

ABSORBER DIFFUSER

Date: 09-12-2015
Not To Scale

PROPOSED ACOUSTICAL DETAILS FOR TEACHERS LEARNING CENTER AT IUCAA CAMPUS,PUNE

Consultant
V. N. PURANDARE
124, Shaniwar Peth Pune 411030
Cell: 9890922712

ACOUSTICAL DRAWING

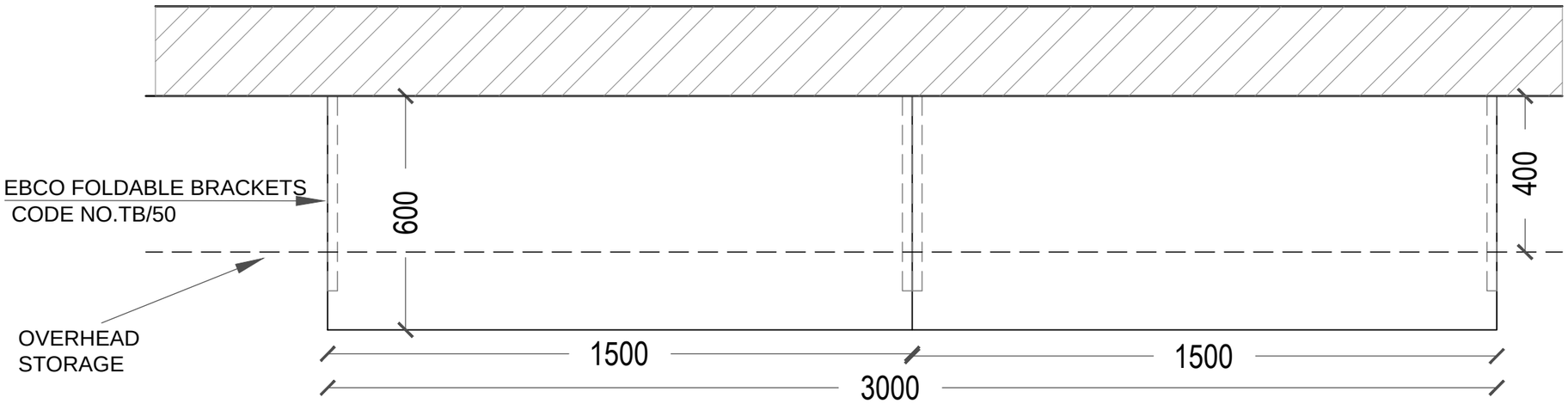

PLAN OF FOLDABLE TABLE

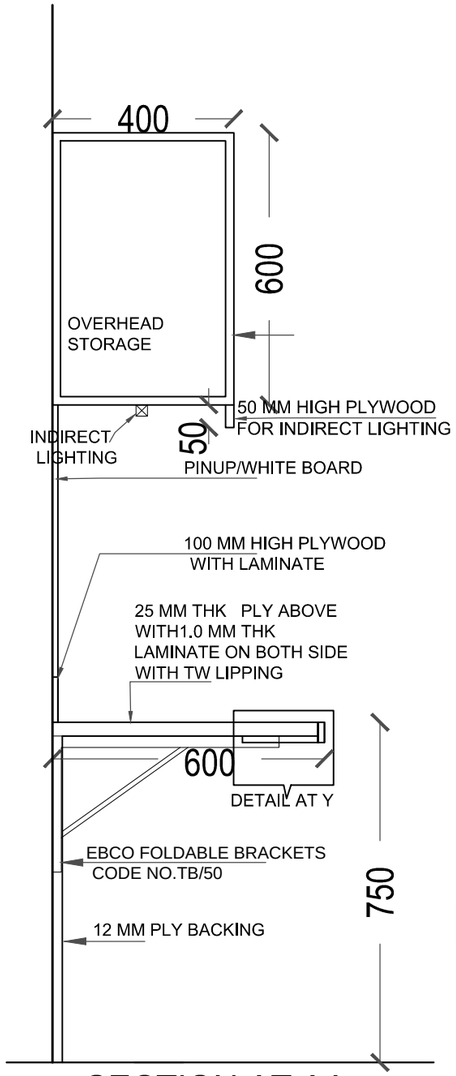

SECTION AT AA

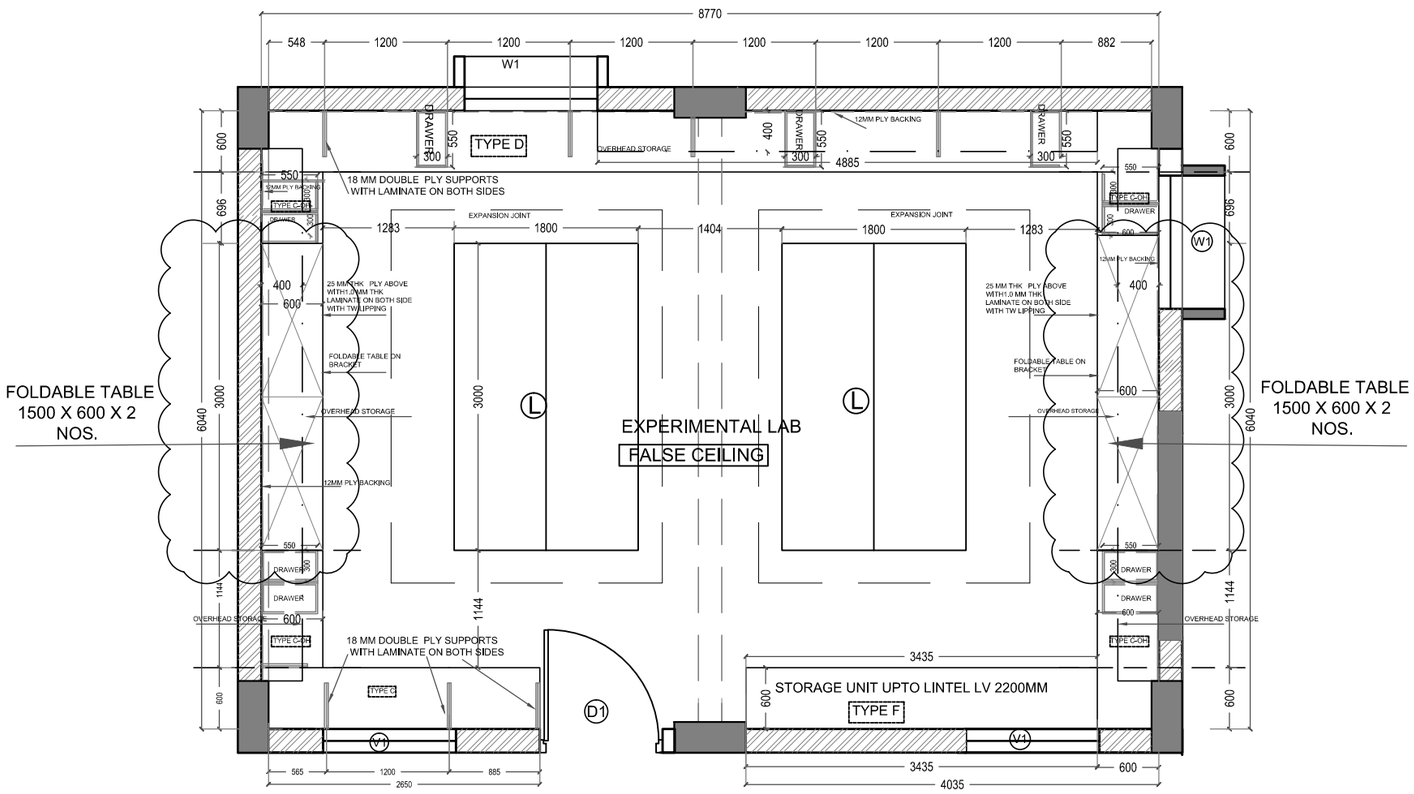

ROOM 1 - EXPERIMENTAL LAB

DRG. NO.
IU/TLC/IN/111
DATE : 6.1.2020

TITLE : FOLDING TABLE DETAILS
PROJECT : TEACHER'S LEARNING CENTRE AT IUCAA CAMPUS
CLIENT : THE DIRECTOR ,IUCAA
SCALE : NTS | DATE : 31.08.18 | DESIGN : KAVITA

ARCHITECT
RAJEEV VISHWJASRAO
ARCHITECTS & PLANNERS
'SANSKRUTI' 3RD FLOOR, PLOT NO. 3, SADASHIV PETH,
PUNE - 411 030. TEL NO. - 020 24530008, 24532008

NO. REVISIONS

ALL DIMENSIONS SHALL BE CHECKED & CO-RELATED WITH STRUCTURAL / WORKING DRAWINGs & AMBIGUITY SHALL BE IMMEDIATELY BROUGHT TO THE NOTICE OF THE ARCHITECTS BEFORE ITS EXECUTION.
NO DRAWING SHALL BE SCALED & ONLY WRITTEN DIMENSIONS TO BE FOLLOWED.
ALL DIMENSIONS ARE IN METER UNLESS OTHERWISE SPECIFIED.

THIS DRAWING IS THE PROPERTY OF
M/S RAJEEV VISHWJASRAO ARCHITECTS (PUNE)
& NOT TO BE COPIED OR USED WITHOUT
THEIR WRITTEN PERMISSION.

C:\Users\PC8\Desktop\TLC\IUCAA TLC-FOLDABLE TABLE -EXP LAB -20.1.20.25.dwg

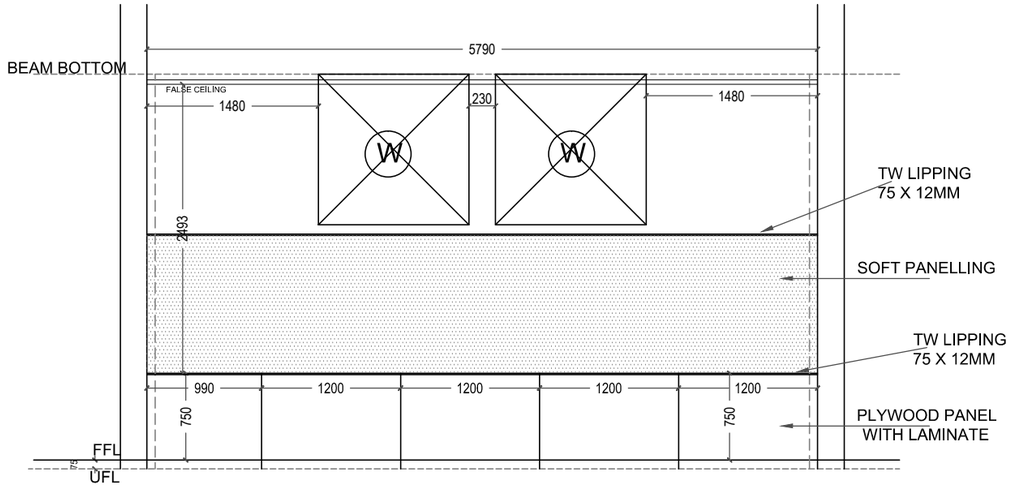

ELEVATION A

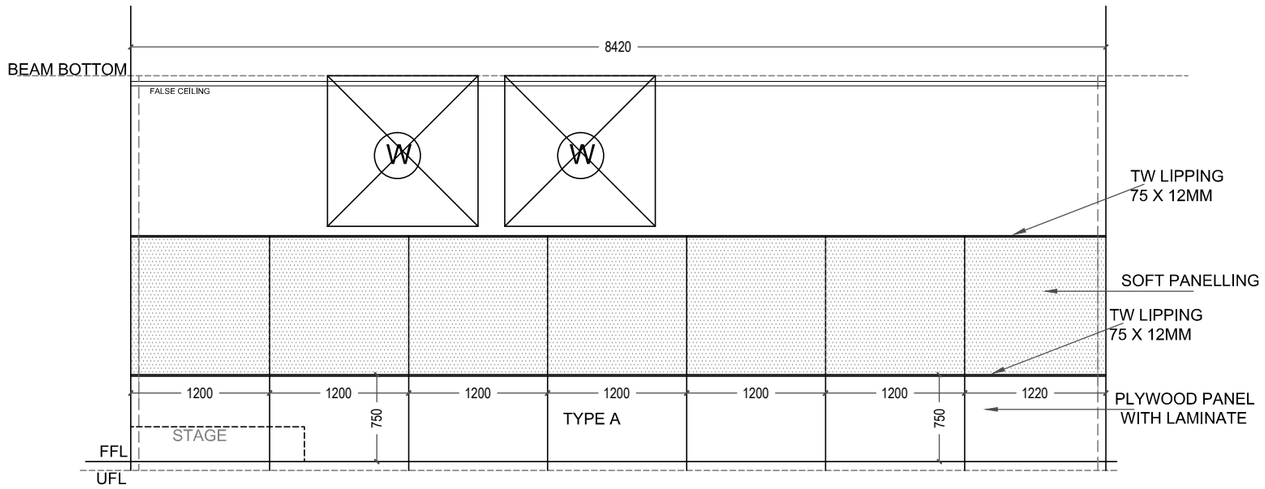

ELEVATION B

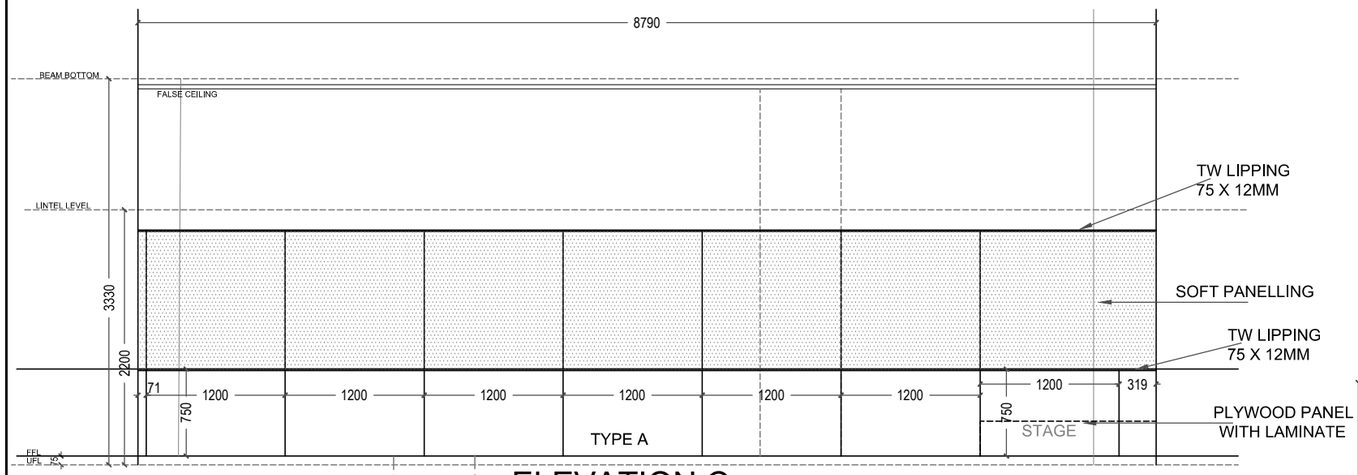

ELEVATION C

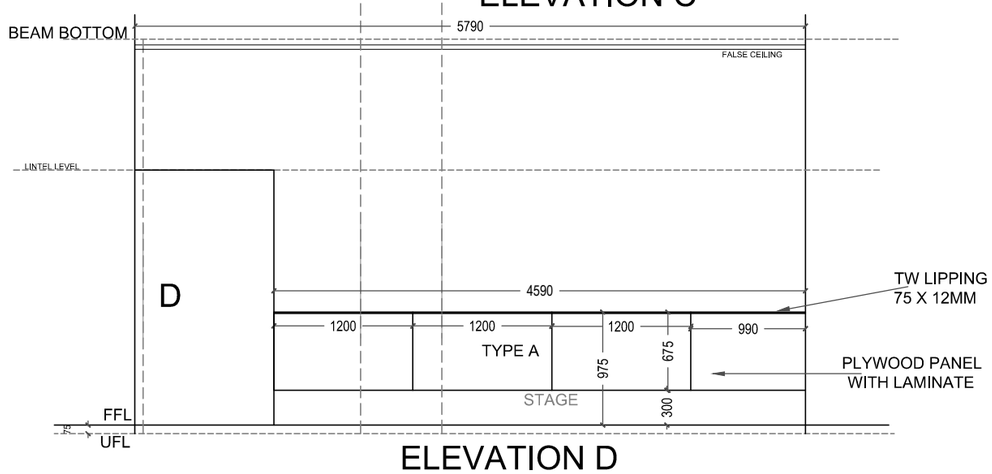

ELEVATION D

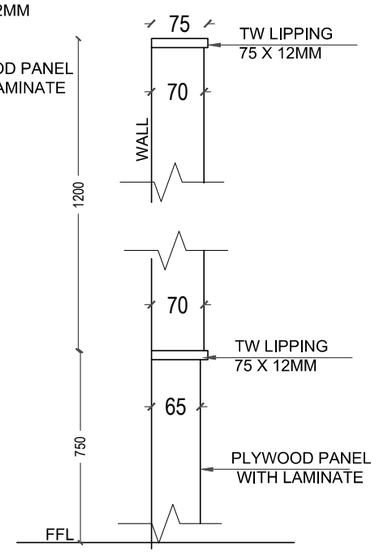

TYPICAL SECTION OF PANEL

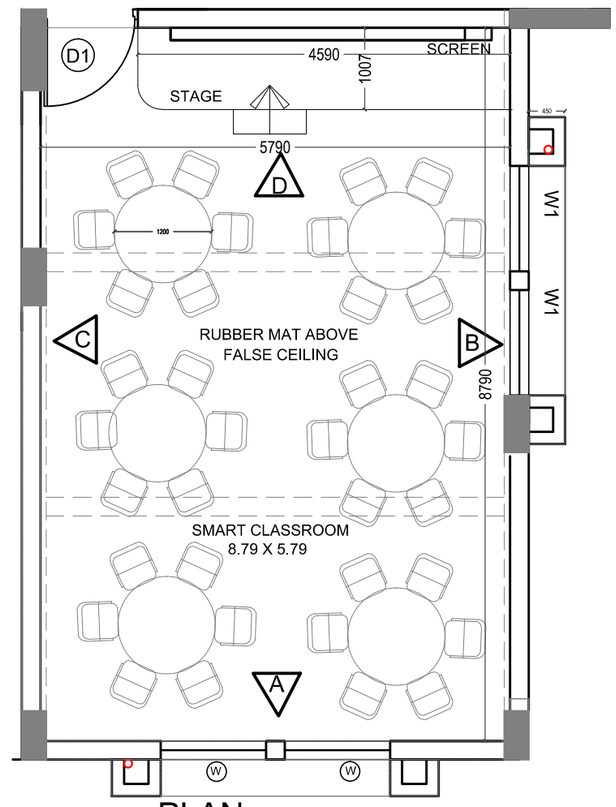

PLAN

SMART CLASSROOM WALL PANELLING DETAILS

DRG. NO.
IU/TLC/IN/234
DATE : 17.12.19

TITLE : WALL PANELLING-SMART CLASSROOM
PROJECT : TEACHER'S LEARNING CENTRE AT IUCAA CAMPUS
CLIENT :THE DIRECTOR ,IUCAA
SCALE : NTS | DATE : 31.08.18 | DESIGN : KAVITA

ARCHITECT
RAJEEV VISHWJ ASRAO
ARCHITECTS & PLANNERS
'SANSKRUTI' 3RD FLOOR, PLOT NO. 3, SADASHIV PETH,
PUNE - 411 030. TEL. NO. - 020 24530008, 24532008

NO | REVISIONS

ALL DIMENSIONS SHALL BE CHECKED & CO-RELATED WITH STRUCTURAL / WORKING DRAWINGS & AMBIGUITY SHALL BE IMMEDIATELY BROUGHT TO THE NOTICE OF THE ARCHITECTS BEFORE ITS EXECUTION.
THE DRAWINGS SHOULD NOT BE SCALED & ONLY WRITTEN DIMENSIONS TO BE FOLLOWED.
ALL DIMENSIONS ARE IN METER UNLESS OTHERWISE SPECIFIED.

THIS DRAWING IS THE PROPERTY OF
M/S RAJEEV VISHWJ ASRAO ARCHITECTS,(PUNE)
& NOT TO BE COPIED OR USED WITHOUT
THEIR WRITTEN PERMISSION.

C:\Users\PC\Desktop\TLC\IUCAA-TLC-WALL PANEL 20-1-20.20.dwg

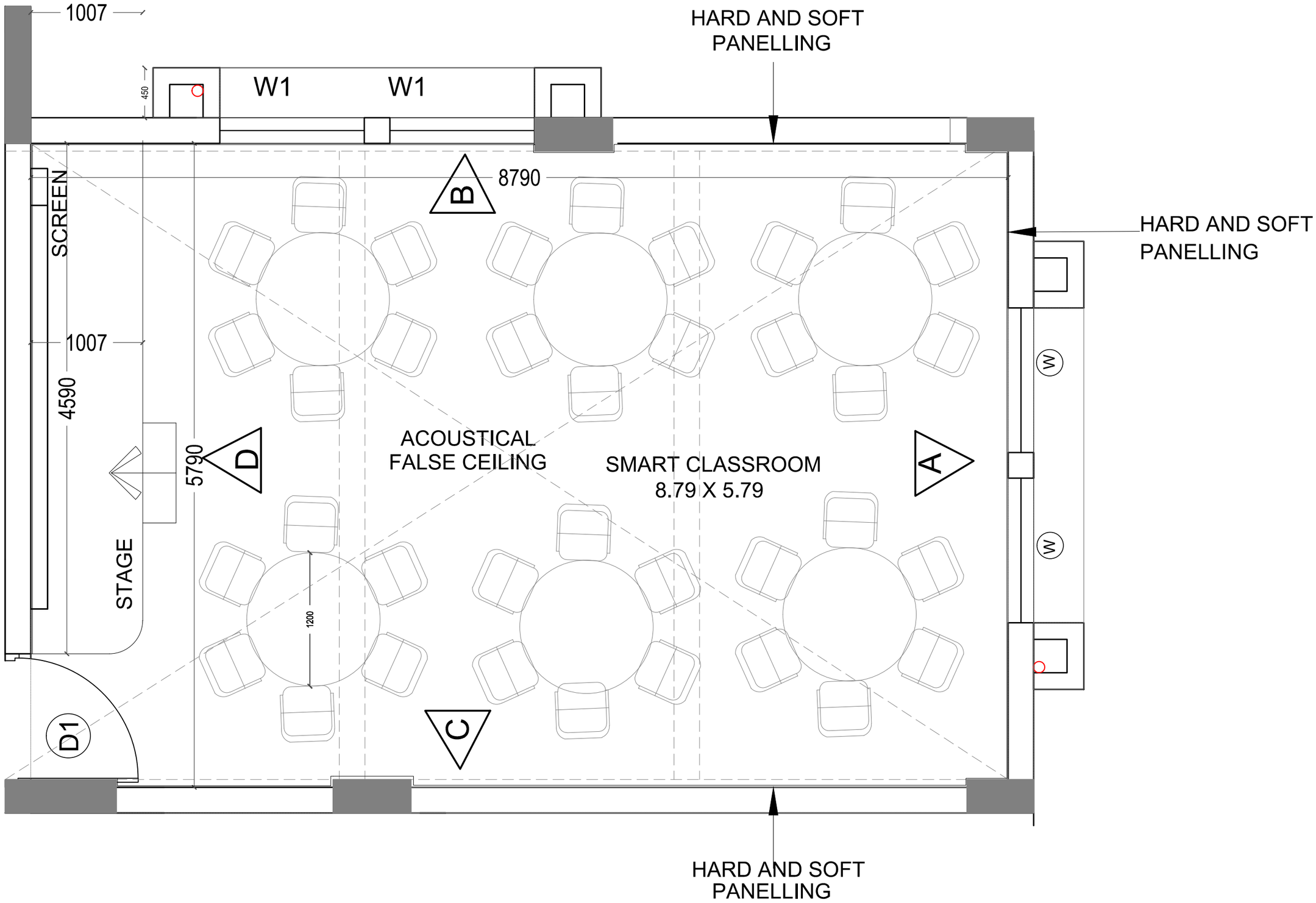

SMART CLASSROOM
LAYOUT -FIRST FLOOR

DRG. NO.
IU/TLC/IN/231
DATE : 17.12.19

TITLE : WALL PANELLING-SMART CLASSROOM
PROJECT : TEACHER'S LEARNING CENTRE AT IUCAA CAMPUS
CLIENT : THE DIRECTOR ,IUCAA
SCALE : NTS | DATE : 31.08.18 | DESIGN : KAVITA

ARCHITECT
RAJEEV VISHWI ASRAO
ARCHITECTS & PLANNERS
'SANSKRUTI' 3RD FLOOR, PLOT NO. 3, SADASHIV PETH,
PUNE - 411 030. TEL NO. - 020 24530008, 24532008

NO | REVISIONS

ALL DIMENSIONS SHALL BE CHECKED & CO-RELATED WITH STRUCTURAL / WORKING DRAWINGs & AMBIGUITY SHALL BE IMMEDIATELY BROUGHT TO THE NOTICE OF THE ARCHITECTS BEFORE ITS EXECUTION.
THIS DRAWING SHOULD NOT BE SCALED & ONLY WRITTEN DIMENSIONS TO BE FOLLOWED.
ALL DIMENSIONS ARE IN METER UNLESS OTHERWISE SPECIFIED.

THIS DRAWING IS THE PROPERTY OF
M/S RAJEEV VISHWI ASRAO ARCHITECTS (PUNE)
& NOT TO BE COPIED OR USED WITHOUT
THEIR WRITTEN SANCTION.

C:\Users\PC\Desktop\TLC\AUDITORIUM AND SMART LAYOUT 20.1.2020.dwg